GROUP 54A

CHASSIS ELECTRICAL

CONTENTS

Continued on next page

⚠ *WARNING*
Battery posts, terminals and related accessories contain lead and lead compounds. WASH HANDS AFTER HANDLING.

WARNINGS REGARDING SERVICING OF SUPPLEMENTAL RESTRAINT SYSTEM (SRS) EQUIPPED VEHICLES

⚠ *WARNING*
- ***Improper service or maintenance of any component of the SRS, or any SRS-related component, can lead to personal injury or death to service personnel (from inadvertent firing of the air bag) or to the driver and passenger (from rendering the SRS inoperative).***
- ***Service or maintenance of any SRS component or SRS-related component must be performed only at an authorized MITSUBISHI dealer.***
- ***MITSUBISHI dealer personnel must thoroughly review this manual, and especially its GROUP 52B - Supplemental Restraint System (SRS) before beginning any service or maintenance of any component of the SRS or any SRS-related component.***

NOTE
The SRS includes the following components: SRS air bag control unit, SRS warning light, front impact sensors, air bag module, clock spring, and interconnecting wiring. Other SRS-related components (that may have to be removed/installed in connection with SRS service or maintenance) are indicated in the table of contents by an asterisk (*).

Continued on next page

BATTERY

ON-VEHICLE SERVICE

BATTERY CHECK

M1541001000289

⚠ WARNING
Battery posts, terminals and related accessories contain lead and lead compounds. WASH HANDS AFTER HANDLING.

BATTERY VISUAL INSPECTION (1)

The battery contains a visual test indicator which gives a green signal when an adequate charge level exists, and a dark signal when charging is required.

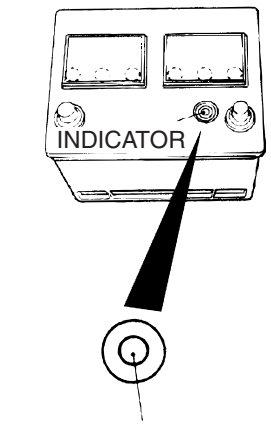

DARK EYE:CHARGING NECESSARY
GREEN:GOOD CONDITION

ACX01557AB

BATTERY VISUAL INSPECTION (2)

Make sure ignition switch is in the "LOCK" (OFF) position and all battery fed accessories are OFF.

1. Disconnect the negative cable from battery before disconnecting the positive cable.

⚠ WARNING
Care should be taken in the event battery case is cracked or leaking to protect hands from the electrolyte. A suitable pair of rubber gloves (not the household type) should be worn when removing battery by hand.

2. Remove the battery from the vehicle.
3. Inspect the battery carrier for damage caused by loss of acid from battery. If acid damage is present, it is necessary to clean area with a solution of clean warm water and baking soda. Scrub area with a stiff bristle brush. Wipe clean with a cloth moistened with ammonia or baking soda in water.
4. Clean the battery, especially the top with same solutions as described in step 3.
5. Inspect the battery case and cover for cracks. If cracks are present, battery must be replaced.
6. Clean the battery post with a suitable battery post cleaning tool.
7. Clean the inside surfaces of the terminal clamps with a suitable battery terminal cleaning tool. Replace damaged or frayed cables and broken terminal clamps.
8. Install the battery in the vehicle.
9. Connect the positive and negative cables to the battery in the order of mention.
10. Tighten the clamp nut securely.

BATTERY CHARGING

M1541001100510

⚠ ***WARNING***

When batteries are being charged, an explosive gas forms beneath the cover of each cell. Do not smoke near batteries on charge or which have recently been charged. Do not break live circuits at the terminals of the batteries on charge. A spark will occur where the live circuit is broken. Keep all open flames away from the battery.

Battery electrolyte temperature may temporarily be allowed to rise to 55° C (131° F). Increase of electrolyte temperature above 55 ° C (131° F) is harmful to the battery, causing deformation of battery cell, decrease in life of battery, etc.

CHARGE RATE

If the test indicator is dark, the battery should be charged as outlined below. When the dot appears or when maximum charge shown below is reached, charging should be stopped.

Charge Rate Chart

BATTERY	80D26L-MF
Slow charging	5 amps 11 hours
	10 amps 6 hours
Fast charging	20 amps 3 hours
	30 amps 2 hours

BATTERY TEST

M1541001200896

BATTERY TESTING PROCEDURE

STEP 1. Check the battery cables.

(1) Remove the negative cable, then the positive cable.
(2) Check for dirty or corroded connections.

Q: Are the battery cables dirty or have corroded connections?
YES : Clean the battery cables. Then go to Step 2.
NO : Go to Step 2.

STEP 2. Check the battery post.

Check for loose battery post.

Q: Are the battery posts faulty?
YES : Replace the battery. Then go to Step 4.
NO : Go to Step 3.

STEP 3. Check the battery case and cover.

(1) Remove the hold-downs and shields.
(2) Check for broken/cracked case or cover.

Q: Is the battery case or cover faulty?
YES : Replace the battery. Then go to Step 4.
NO : Go to Step 4.

STEP 4. Check the open circuit voltage.

(1) Turn headlights on for 15 seconds.
(2) Turn headlights off for two minutes to allow battery positive voltage to stabilize.
(3) Disconnect the battery cables.
(4) Read open circuit voltage.

Q: Is open circuit voltage 12.4 volts or more?
YES : Go to Step 5.
NO : Charge the battery at 5 amps for 15 hours. Then re-test.

STEP 5. Check the load test.

(1) Connect a load tester to the battery.
(2) Load the battery at the recommended discharge rate (See LOAD TEST RATE CHART) for 15 seconds.
(3) Read voltage after 15 seconds, then remove load.
(4) Compare the measured value with the minimum voltage (See LOAD TEST CHART).

Q: Is the voltage higher than minimum voltage?
YES : The battery is normal.
NO : Replace the battery. Then go to Step 4.

LOAD TEST CHART

TEMPERATURE °C (°F)	21 (70) AND ABOVE	16 (60)	10 (50)	4 (40)	-1 (30)	-7 (20)	-12 (10)	-18 (0)
Minimum voltage	9.6	9.5	9.4	9.3	9.1	8.9	8.7	8.5

LOAD TEST RATE CHART

LOAD TEST	290 amps
Cranking ratio (-18° C, 0° F)	582 amps
Reserve capacity	133 minutes
Application	80D26L

IGNITION SWITCH

GENERAL DESCRIPTION

M1543009901627

IGNITION KEY REMINDER TONE ALARM

The ignition key reminder tone alarm will sound under the following condition, and warn the driver to remove the ignition key.

- The driver's door is opened when the ignition switch is at "LOCK" (OFF) or "ACC" position without removing the ignition key.

However, the light reminder tone alarm will take precedence over this function.

DOOR LOCK PREVENTION FUNCTION

If the key is left in the ignition switch while the driver's door opened or the assistant door opened, all door are automatically unlock to prevent locking the ignition key in the vehicle after door is locked.

IMMOBILIZER SYSTEM

The immobilizer system consists of the ignition key, the immobilizer-ECU, key ring antenna, and the ECM <M/T> or PCM <A/T>. The ignition key has a built-in transponder. Only the registered ignition key permits the engine to start, therefore, the engine can never be started by means of a forged key or by connecting the ignition wiring directly. The system is significantly safe and reliable against theft. In addition, the driver has only to turn the ignition switch to the "ON" position to activate the immobilizer system. If the requirements for starting the engine are not satisfied, the engine will be immobilized. If a registered ignition key is lost, all your ignition keys need to be registered again using scan tool MB991958 (MUT-III Sub Assembly) to ensure security (Refer to P.54A-34). An additional ignition key can be registered as follows (only if no ignition keys are lost):

- Using scan tool MB991958 (MUT-III Sub Assembly) (Refer to P.54A-34).
- By operating two ignition keys that have been already registered (Refer to P.54A-34).

OPERATION

1. When the ignition switch is turned to "ON" position, the ECM <M/T> or PCM <A/T> sends a requirement for the encrypted code to the immobilizer-ECU (at this time, the engine is remobilized).
2. When the immobilizer-ECU receives the requirement from the ECM <M/T> or PCM <A/T>, the immobilizer-ECU supplies power to the transponder inside the ignition key via the antenna. The energized transponder sends the encrypted code back to the immobilizer-ECU via the antenna.
3. The immobilizer-ECU judges the encrypted code with its code logic in itself. If they are identical, the immobilizer-ECU sends the encrypted code to the ECM <M/T> or PCM <A/T>.
4. If the ECM <M/T> or PCM <A/T> can not receive the encrypted code, the engine will be immobilized.

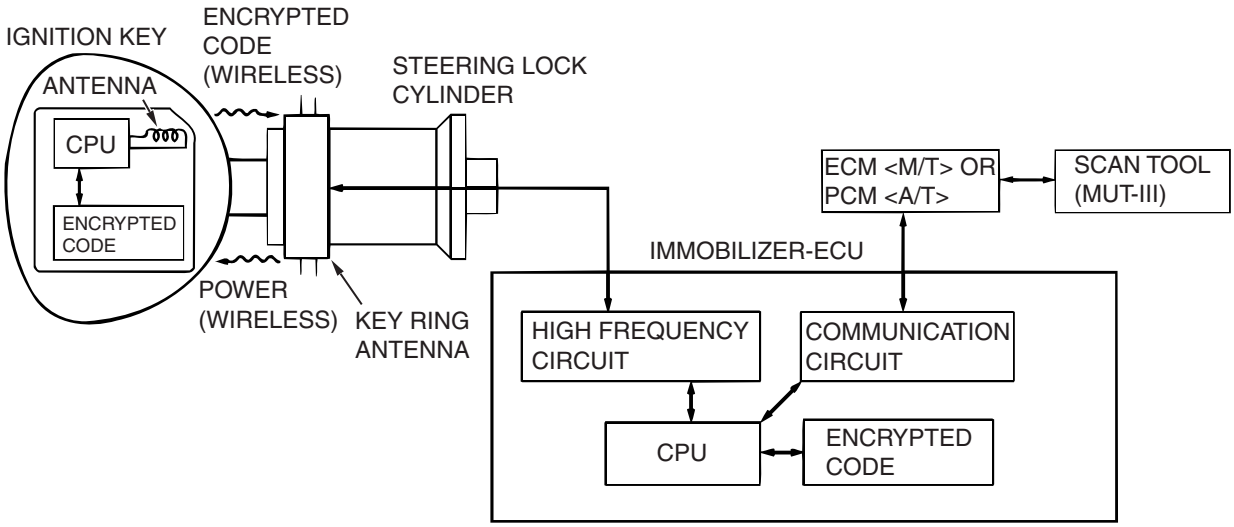

AC002231AD

DISPOSITION WHEN REPLACING IMMOBILIZER SYSTEM RELATED PARTS

The replacing immobilizer system related parts is as follows. When the ignition key is re-registered with the MUT-III, the originally registered ignition key registration information will be lost.

ITEM	ECM <M/T> OR PCM <A/T>	IMMOBILIZER-ECU	IGNITION KEY
When replacing ECM <M/T> or PCM <A/T>	-	Replacement not required	Replacement not required. All ignition keys re-registration are required.
When rewriting ECM* <M/T> or PCM* <A/T>	-	Replacement not required	Replacement not required. Re-registration not required.
When replacing immobilizer-ECU	Replacement not required	-	Replacement not required. Re-registration are required.
When adding ignition keys newly (if no registered ignition keys are lost)	Replacement not required	Replacement not required	Register only additional ignition keys to be registered.
When adding ignition key newly (if a registered ignition key is lost)	Replacement not required	Replacement not required	Register ignition key to be added and re-register all other ignition keys.
When ignition key is lost	Replacement not required	Replacement not required	Re-register all other ignition keys except the lost one.

*NOTE: *: When the ECM <M/T> or PCM <A/T> other than immobilizer system is rewritten, it is not necessary to register the ignition key again.*

IGNITION SWITCH DIAGNOSIS

M1543000700582

The Ignition key reminder torn alarms are controlled by the Simplified Wiring System (SWS). For troubleshooting, refer to GROUP 54B, SWS Diagnosis P.54B-23.

INTRODUCTION TO IMMOBILIZER SYSTEM DIAGNOSIS

M1543009901638

⚠ CAUTION

- **The encrypted code should always be re-registered when replacing the immobilizer-ECU.**
- **If the immobilizer-ECU has been replaced with a new part, the password (vehicle secret code) which has been stored in the immobilizer-ECU for each vehicle will be replaced by a new password (secret code) specified by the customer.**

The immobilizer system consists of the immobilizer-ECU, ECM <M/T> or PCM <A/T>, ignition key and ignition key ring antenna. If the engine cannot be started by using a registered ignition key, one of these components may be defective. In addition, if the immobilizer system has immobilized the engine, MFI system DTC P0513 will be output. In this case, observe the immobilizer system troubleshooting. Then, if a malfunction is resolved, the MFI system DTC P0513 should not reset.

IMMOBILIZER SYSTEM DIAGNOSTIC TROUBLESHOOTING STRATEGY

M1543006900852

Use these steps to plan your diagnostic strategy. If you follow them carefully, you will be sure that you have exhausted most of the possible ways to find an immobilizer system fault.

1. Gather information about the problem from the customer.
2. Verify that the condition described by the customer exists.
3. Check the vehicle for any immobilizer system DTC.
4. If you cannot verify the condition and there are no immobilizer system DTCs, the malfunction is intermittent. Refer to GROUP 00, How to Use Troubleshooting/inspection Service Points –How to Cope with Intermittent Malfunctions P.00-13.
5. If you can verify the condition but there are no immobilizer system DTCs, or the system cannot communicate with scan tool MB991958, refer to Symptom Chart P.54A-15 and find the fault.
6. If there is an immobilizer system DTC, record the number of the DTC, then erase the DTC from the memory using scan tool MB991958.
7. Recreate the immobilizer system DTC set conditions to see if the same immobilizer system DTC will set again.
   - If the same immobilize system DTC sets again, perform the diagnostic procedures for the DTC. Refer to Diagnostic Trouble Code Chart P.54A-11.
   - If you cannot get the same immobilizer system DTC to set again, the malfunction is intermittent. Refer to GROUP 00, How to Use Troubleshooting/inspection Service Points –How to Cope with Intermittent Malfunctions P.00-13.

DIAGNOSIS FUNCTION

M1543007000777

HOW TO CONNECT SCAN TOOL (MUT-III)

Required Special Tool:
MB991958: Scan Tool (MUT-III Sub Assembly)
- MB991824: Vehicles Communication Interface (V.C.I.)
- MB991827: MUT-III USB Cable
- MB991910: Main Harness A

⚠ CAUTION
To prevent damage to scan tool MB991958, always turn the ignition switch to the "LOCK" (OFF) position before connecting or disconnecting scan tool MB991958.

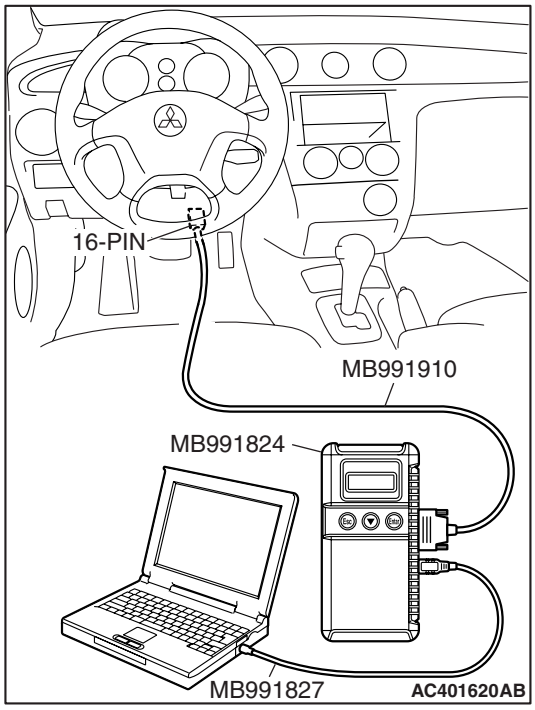

1. Ensure that the ignition switch is at the "LOCK" (OFF) position.
2. Start up the personal computer.
3. Connect special tool MB991827 to special tool MB991824 and the personal computer.
4. Connect special tool MB991910 to special tool MB991824.
5. Connect special tool MB991910 to the data link connector.
6. Turn the power switch of special tool MB991824 to the "ON" position.

   NOTE: When special tool MB991824 is energized, special tool MB991824 indicator light will be illuminated in a green color.
7. Start the MUT-III system on the personal computer.

   NOTE: Disconnecting the scan tool MB991958 is the reverse of the connecting sequence, making sure that the ignition switch is at the "LOCK" (OFF) position.

HOW TO READ AND ERASE DIAGNOSTIC TROUBLE CODES

Required Special Tool:
MB991958: Scan Tool (MUT-III Sub Assembly)
- MB991824: Vehicles Communication Interface (V.C.I.)
- MB991827: MUT-III USB Cable
- MB991910: Main Harness A

⚠ CAUTION
To prevent damage to scan tool MB991958, always turn the ignition switch to the "LOCK" (OFF) position before connecting or disconnecting scan tool MB991958.

NOTE: If the battery voltage is low, diagnostic trouble codes will not be set. Check the battery if scan tool MB991958 does not display.

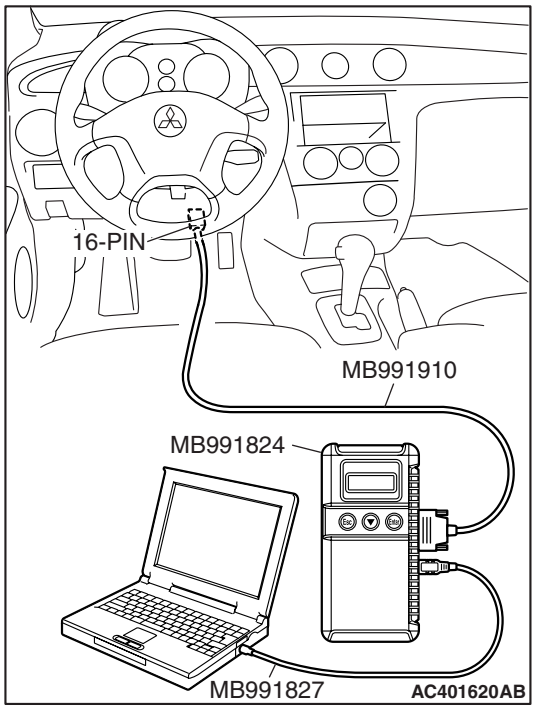

1. Connect scan tool MB991958 to the data link connector.
2. Turn the ignition switch to "ON" position.
3. Select "Interactive Diagnosis" from the start-up screen.
4. Select "System select."
5. Choose "IMMOBILIZER" from the "POWER TRAIN" tab.
6. Select "Self-diagnosis."
7. If a DTC is set, it is shown.
8. Choose "Erase DTCs" to erase the DTC.

HOW TO READ DATA LIST

Required Special Tool:
MB991958: Scan Tool (MUT-III Sub Assembly)
- MB991824: Vehicles Communication Interface (V.C.I.)
- MB991827: MUT-III USB Cable
- MB991910: Main Harness A

⚠ CAUTION
To prevent damage to scan tool MB991958, always turn the ignition switch to the "LOCK" (OFF) position before connecting or disconnecting scan tool MB991958.

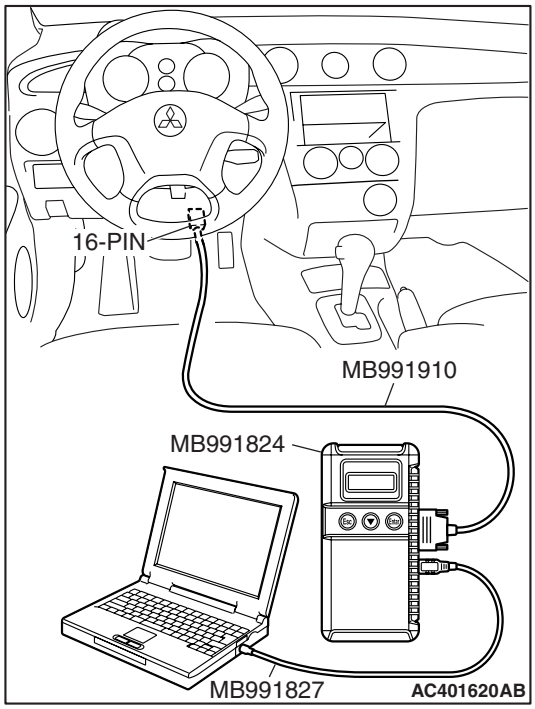

1. Connect scan tool MB991958 to the data link connector.
2. Turn the ignition switch to "ON" position.
3. Select "Interactive Diagnosis" from the start-up screen.
4. Select "System select."
5. Choose "IMMOBILIZER" from the "POWER TRAIN" tab.
6. Select "Data List."
7. Choose an appropriate item and select the "OK" button.

DIAGNOSTIC TROUBLE CODE CHART

M1543007100428

⚠ CAUTION

During diagnosis, a DTC code associated with other system may be set when the ignition switch is turned on with connector(s) disconnected. On completion, confirm all systems for DTC code(s). If DTC code(s) are set, erase them all.

Use the following chart to develop proper diagnostic strategy.

DIAGNOSTIC TROUBLE CODE NO.	DESCRIPTION	REFERENCE PAGE
11	Transponder communication system or radio interference of encrypted code	P.54A-11
12	Encrypted codes are not the same or are not registered	P.54A-15

DIAGNOSTIC TROUBLE CODE PROCEDURES

DTC 11:Transponder Communication System or Radio Interference of Encrypted Code

Ignition Key Ring Antenna Circuit

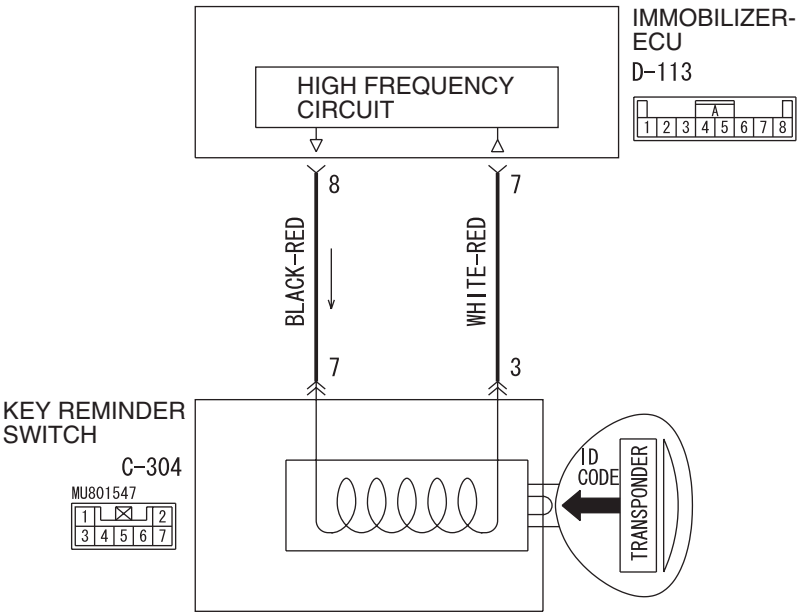

W4Z54M28AA

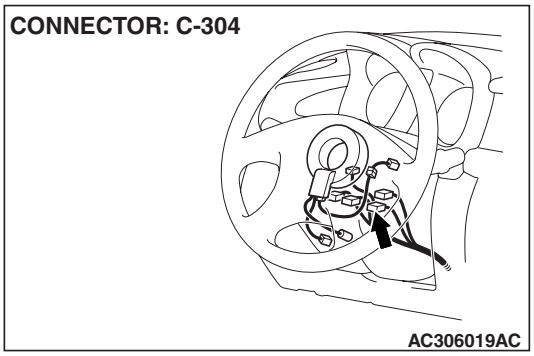

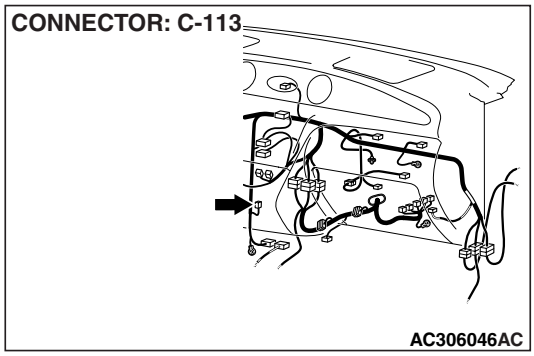

CIRCUIT OPERATION

The ignition key is powered by the ignition key ring antenna, and sends an encrypted code. The ignition key ring antenna receives the encrypted code, and determines whether the ignition key is a registered key or not.

DTC SET CONDITION

- DTC 11 may be output if other ignition keys are in the vicinity of the vehicle as it is being started.
- The transponder's encrypted code is not sent to the immobilizer-ECU immediately after the ignition switch is turned to "ON" position.

NOTE: DTC 11 is always output together with MFI system DTC P0513.

TROUBLESHOOTING HINTS

- Radio interference of encrypted code.
- Malfunction of transponder.
- Malfunction of ignition key ring antenna.
- Malfunction of immobilizer-ECU.
- Damaged wiring harness of connectors.

DIAGNOSIS PROCEDURE

Required Special Tools:

- MB991223: Harness Set
- MB991958: Scan Tool (MUT-III Sub Assembly)
  - MB991824: Vehicles Communication Interface (V.C.I.)
  - MB991827: MUT-III USB Cable
  - MB991910: Main Harness A

STEP 1. Check for presence of other key near the key in the ignition.

Q: Is there any other key near the key in the ignition?

YES : Move the other key well away from key being used. Retest the system.

NO : Go to Step 2.

STEP 2. Check that the engine start using the spare ignition key which encrypted code has been registered.

Q: Does the engine start using the spare ignition key for which the encrypted code has been registered?

YES : Replace the ignition key that does not work. Then register the password (secret code) and encrypted code P.54A-34. Retest the system.

NO : Go to Step 3.

STEP 3. Using scan tool MB991958, read the diagnostic trouble code.

⚠ CAUTION

To prevent damage to scan tool MB991958, always turn the ignition switch to the "LOCK" (OFF) position before connecting or disconnecting scan tool MB991958.

(1) Connect scan tool MB991958 to the data link connector.
(2) Turn the ignition switch to the "ON" position.
(3) Use scan tool MB991958 to check immobilizer system diagnostic trouble codes.
(4) Turn the ignition switch to "LOCK" (OFF) position.
(5) Disconnect scan tool MB991958.

Q: Which DTC is output, DTC 11 or 12?

DTC12 is output : Refer to P.54A-15.
DTC11 is output : Go to Step 4.

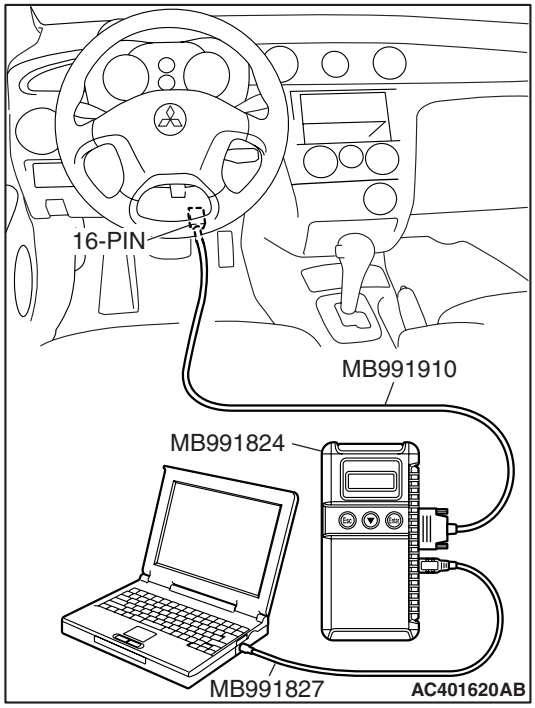

STEP 4. Check the ignition key ring antenna by backprobing.

(1) Disconnect the key reminder switch connector C-304.

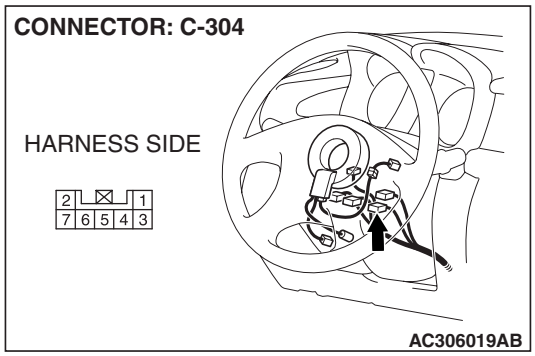

(2) Measure the resistance value between terminal number 3 and terminal number 7 by backprobing.
- The measured value should be 2 ohm or less.

Q: Is the check result normal?

YES : Go to Step 5.
NO : Replace the ignition key ring antenna. Retest the system.

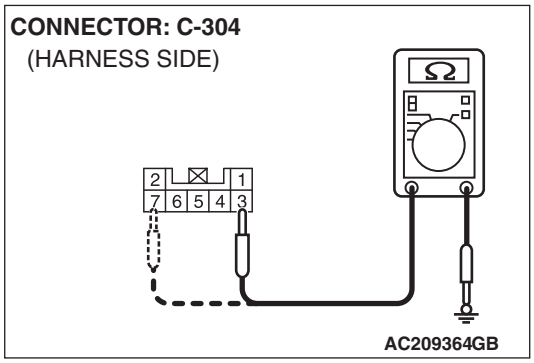

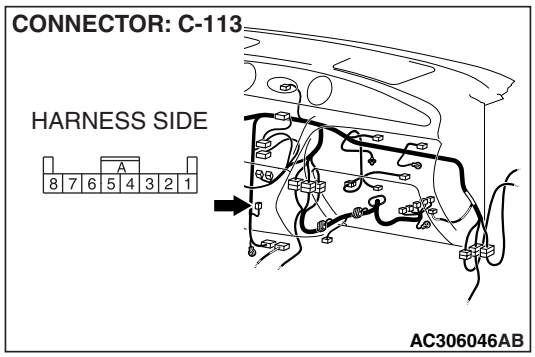

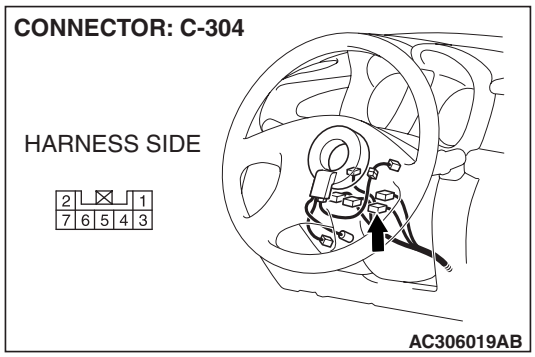

STEP 5. Check Immobilizer-ECU connector C-113 and key reminder switch connector C-304 for loose, corroded or damaged terminals, or terminals pushed back in the connector.

Q: Are immobilizer-ECU connector C-113 and key reminder switch connector C-304 in good condition?

YES : Go to Step 6.

NO : Repair or replace the damage component(s). Confirm that scan tool MB991958 communicates normally.

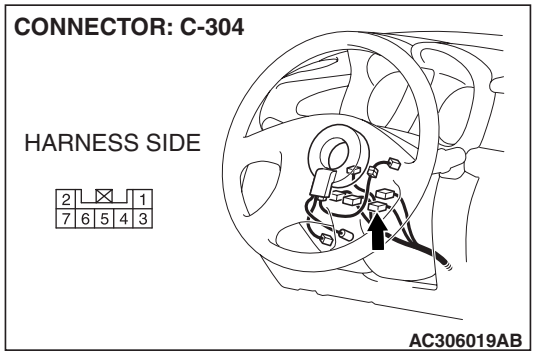

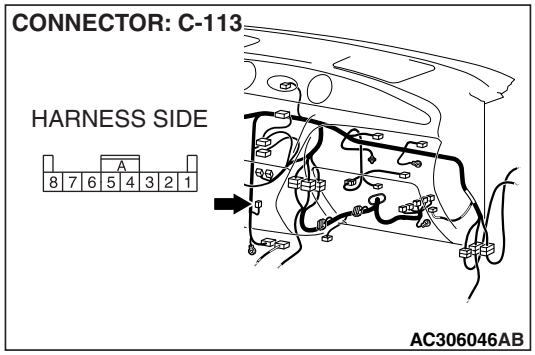

STEP 6. Check the harness wires between immobilizer-ECU connector C-113 (terminal 7 and 8) and key reminder switch connector C-304 (terminal 3 and 7).

Q: Are the harness wires between immobilizer-ECU connector C-113 (terminal 7 and 8) and key reminder switch connector C-304 (terminal 3 and 7) in good condition?

YES : Replace the immobilizer-ECU and then register the password (secret code) and encrypted code (Refer to P.54A-34). Retest the system.

NO : Repair or replace the damaged component(s). Confirm that scan tool MB991958 communicates normally.

DTC12: Encrypted Codes are not the Same or are not Registered

DTC SET CONDITION

The encrypted code sent by the transponder is not the same encrypted code which is registered in the immobilizer-ECU.

NOTE: DTC 12 is always output together with MFI system DTC P0513.

TROUBLESHOOTING HINTS

- The encrypted code in the ignition key has not been properly registered.
- Malfunction of immobilizer-ECU.

DIAGNOSIS PROCEDURE

Was the encrypted code registered?

YES : Replace the immobilizer-ECU and then register the password (secret code) and encrypted code (Refer to P.54A-34). Retest the system.

NO : Register the encrypted code (Refer to P.54A-34).

SYMPTOM CHART

M1543007201097

⚠ CAUTION

During diagnosis, a DTC code associated with other system may be set when the ignition switch is turned on with connector(s) disconnected. On completion, confirm all systems for DTC code(s). If DTC code(s) are set, erase them all.

SYMPTOM	INSPECTION PROCEDURE NO.	REFERENCE PAGE
Communication with scan tool MB991958 is not possible.	1	P.54A-16
The ignition key cannot be registered.	2	P.54A-23
Engine cranks, but does not start.	3	P.54A-25
The immobilizer indicator light does not illuminate.	4	P.54A-27

SYMPTOM PROCEDURES

INSPECTION PROCEDURE 1: Communication with Scan Tool MB991958 is not possible.

Immobilizer-ECU Power Supply, Ground and Powertrain Control Module Communication Line Circuit

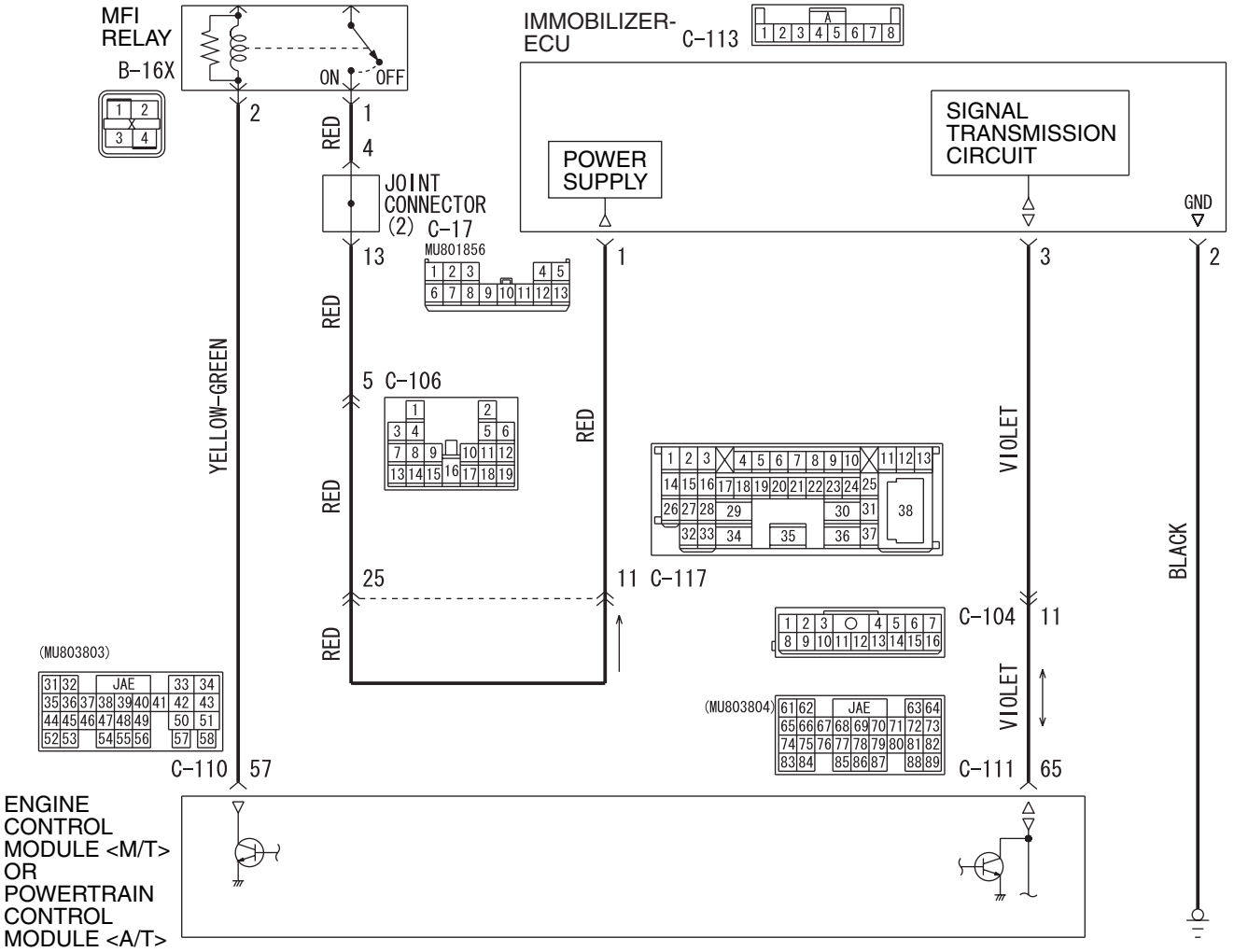

W5Z54M080A

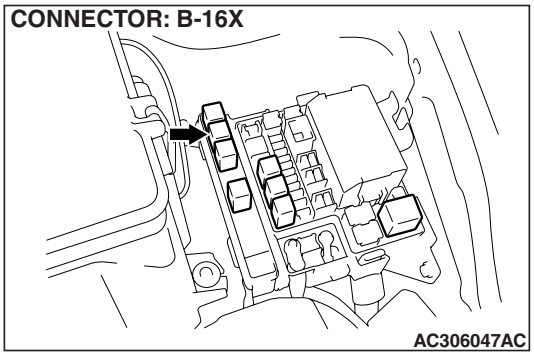

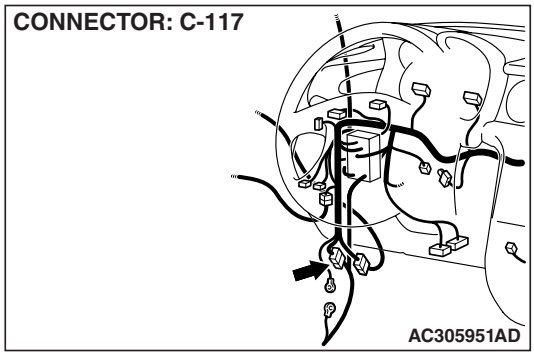

TSB Revision

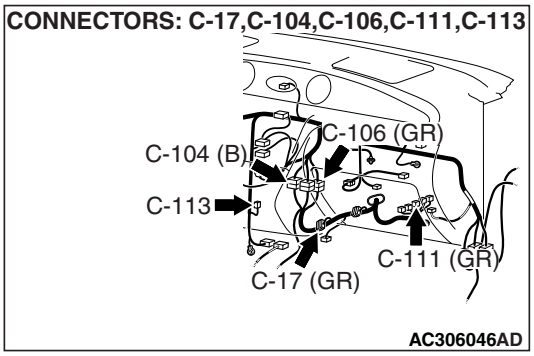

CIRCUIT OPERATION

The Immobilizer-ECU is energized by the MFI relay when the ignition switch is turned "ON". The ECM <M/T> or PCM <A/T> transmits a signal from scan tool MB991958 to the immobilizer-ECU as it is. In the same way, a signal from the immobilizer-ECU is also transmitted to scan tool MB991958 as it is.

TECHNICAL DESCRIPTION (COMMENT)

- This malfunction may be caused by a defective immobilizer-ECU, ECM <M/T> or PCM <A/T>, or a defect in the communication line between the immobilizer-ECU and ECM <M/T> or PCM <A/T>. If this malfunction appears when the MFI system and scan tool MB991958 can communicate each other, MFI system DTC P0513 will reset.
- If the MFI system is normal, the MFI relay can be determined as normal. In addition, if the MFI system and scan tool MB991958 can communicate each other, the circuits between the data link connector and the ECM <M/T> or PCM <A/T> can determined as normal.

  NOTE: If this malfunction appears, MFI system DTC P0513 will be output.

TROUBLESHOOTING HINTS

- Malfunction of the immobilizer-ECU.
- Malfunction of the ECM <M/T> or PCM <A/T>.
- The wiring harness or connectors may have loose, corroded, or damaged terminals, or terminals pushed back in the connector.

DIAGNOSIS PROCEDURE

Required Special Tools:

- MB991223: Harness Set
- MB991958: Scan Tool (MUT-III Sub Assembly)
  - MB991824: Vehicles Communication Interface (V.C.I.)
  - MB991827: MUT-III USB Cable
  - MB991910: Main Harness A

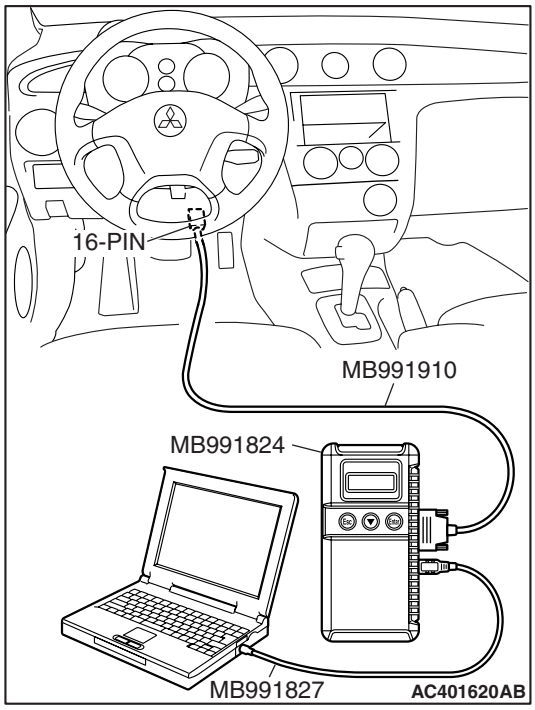

STEP 1. Check if scan tool MB991958 can communicate with the MFI system and if an MFI system DTC other than P0513 is set.

Q: Can scan tool MB991958 communicate with the MFI system? Is an MFI system DTC other than P0513 set?

YES : Go to Step 2.

NO : Refer to GROUP 13A, Multiport Fuel Injection Diagnosis P.13A-622.

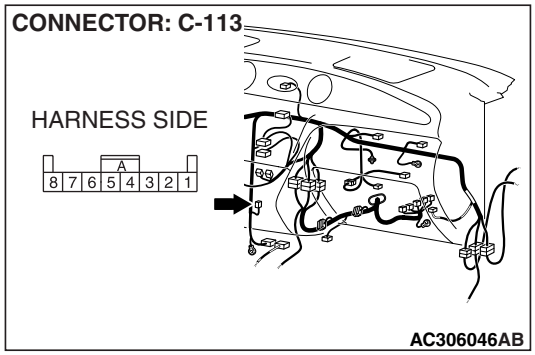

STEP 2. Check the immobilizer-ECU power supply circuit by backprobing.

(1) Do not disconnect immobilizer-ECU connector C-113.

(2) Turn the ignition switch to the "ON" position.

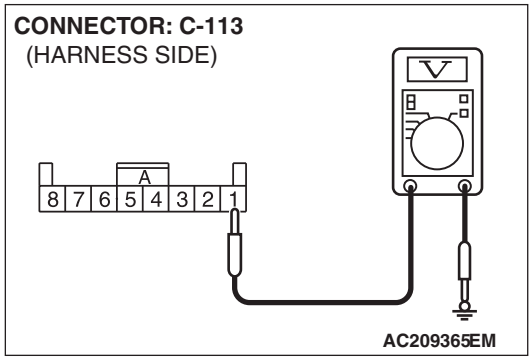

(3) Measure the voltage between terminal 1 and ground by backprobing.

- The voltage should measure approximately 12 volts (battery positive voltage).

Q: Is the measured voltage approximately 12 volts (battery positive voltage)?

YES : Go to Step 5.

NO : Go to Step 3.

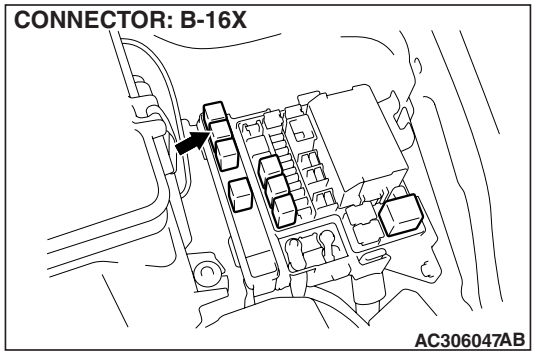

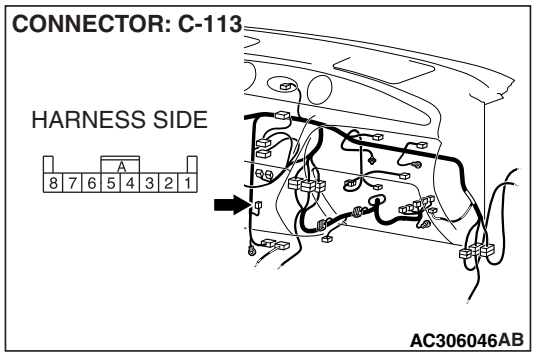

STEP 3. Check immobilizer-ECU connector C-113 and MFI relay connector B-16X for loose, corroded or damaged terminals, or terminals pushed back in the connector.

Q: Are immobilizer-ECU connector C-113 and MFI relay connector B-16X in good condition?

YES : Go to Step 4.

NO : Repair or replace the component(s). Refer to GROUP 00E, Harness Connector Inspection P.00E-2. Confirm that scan tool MB991958 communicates normally.

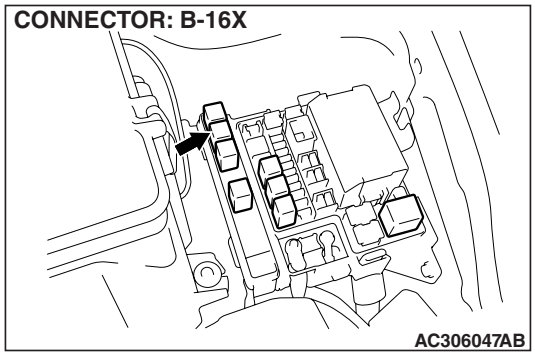

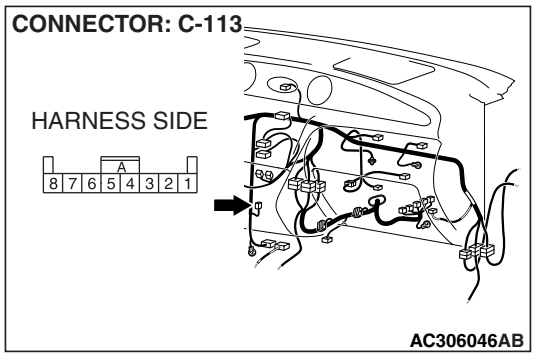

STEP 4. Check the harness wires between immobilizer-ECU connector C-113 (terminal 1) and MFI relay connector B-16X (terminal 1).

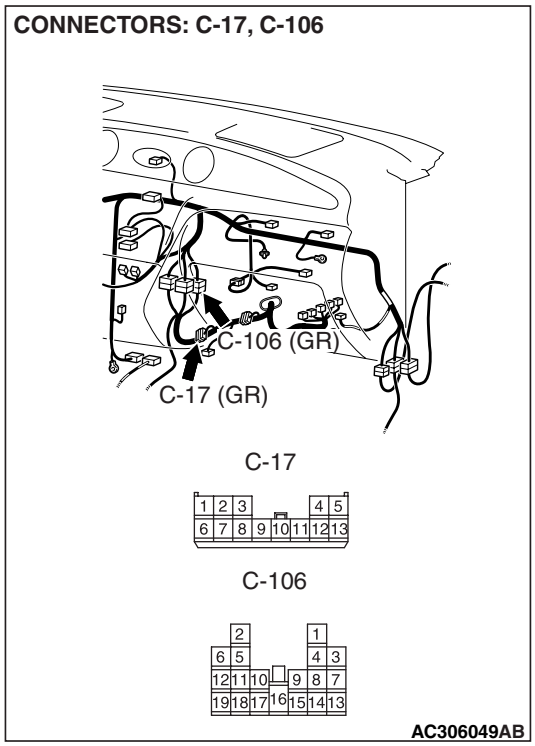

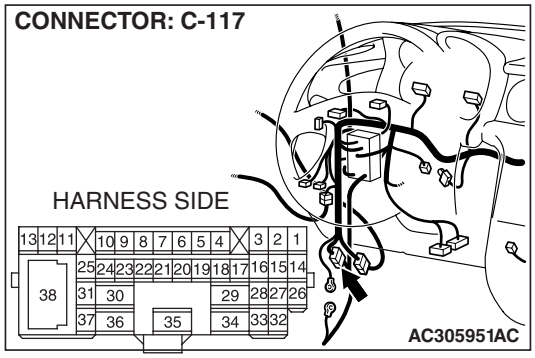

NOTE: Also check intermediate connector C-117, C-106 and joint connector C-17,check the wires. If intermediate connector C-117, C-106 and joint connector C-17 are damaged, repair or replace them. Refer to GROUP 00E, Harness Connector Inspection P.00E-2.

Q: Are the harness wires between immobilizer-ECU connector C-113 (terminal 1) and MFI relay connector B-16X (terminal 1) in good condition?

YES : There is no action to be taken.

NO : Repair the component(s). Confirm that scan tool MB991958 communicates normally.

STEP 5. Measure the resistance at immobilizer-ECU connector C-113.

(1) Do not disconnect immobilizer-ECU connector C-113.

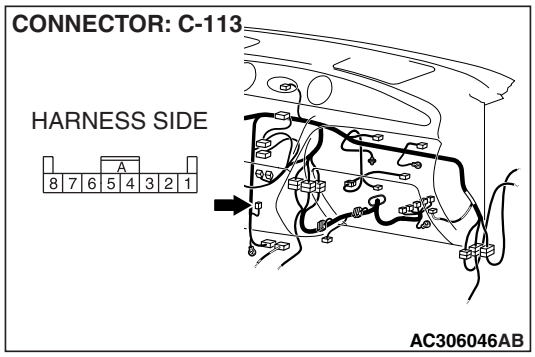

(2) Measure the resistance between terminal 2 and ground.

Q: Is the resistance less than 2 ohms?

YES : Go to Step 8.

NO : Go to Step 6.

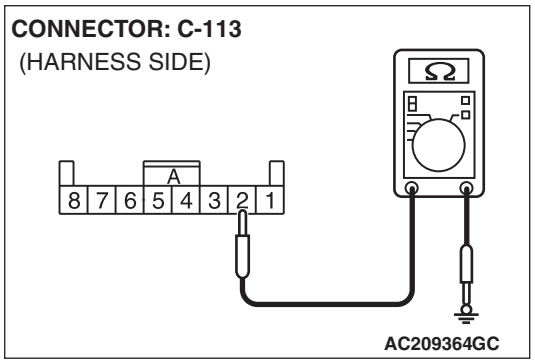

STEP 6. Check immobilizer-ECU connector C-113 for loose, corroded or damaged terminals, or terminals pushed back in the connector.

Q: Is immobilizer-ECU connector C-113 in good condition?

YES : Go to Step 7.

NO : Repair or replace the damaged component(s). Refer to GROUP 00E, Harness Connector Inspection P.00E-2. Confirm that scan tool MB991958 communicates normally.

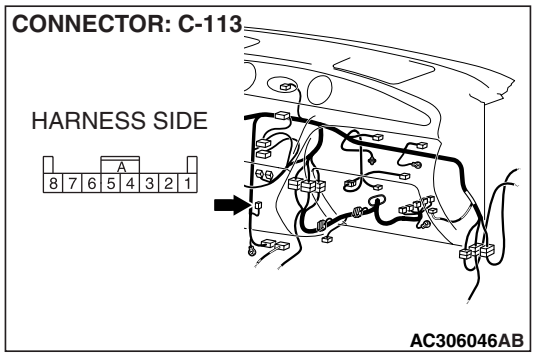

STEP 7. Check the harness wires between immobilizer-ECU connector C-113 (terminal 2) and ground.

Q: Is the harness wire between immobilizer-ECU connector C-113 (terminal 2) and ground in good condition?

YES : There is no action to be taken.

NO : Repair the harness wire. Confirm that scan tool MB991958 communicates normally.

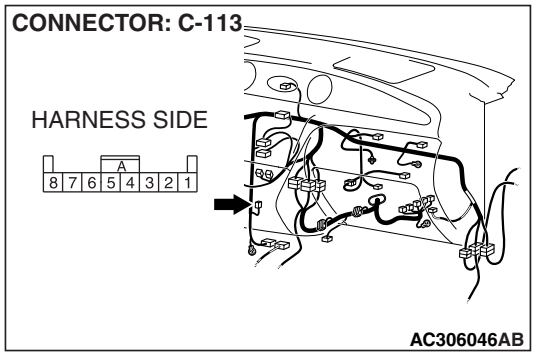

STEP 8. Check immobilizer-ECU connector C-113 and ECM <M/T> or PCM <A/T> connector C-111 for loose, corroded or damaged terminals, or terminal pushed back in the connector.

Q: Is immobilizer-ECU connector C-113 and ECM <M/T> or PCM <A/T> connector C-111 in good condition?

YES : Go to Step 9.

NO : Repair or replace the damaged component(s). Refer to GROUP 00E, Harness Connector Inspection P.00E-2. Confirm that scan tool MB991958 communicates normally.

CONNECTORS: C-111, C-113

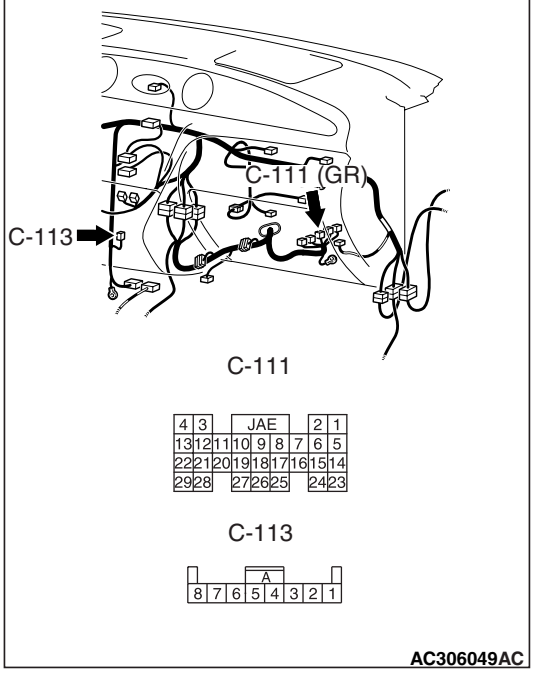

STEP 9. Check the harness wires between immobilizer-ECU connector C-113 and ECM <M/T> or PCM <A/T> connector C-111.

NOTE: Also check intermediate connector C-104 ,check the wires. If intermediate connector C-104 are damaged, repair or replace them. Refer to GROUP 00E, Harness Connector Inspection P.00E-2.

Q: Are the harness wires between immobilizer-ECU connector C-113 and PCM connector C-111 in good condition?

YES : Go to Step 10.

NO : Repair the harness wire. Confirm that scan tool MB991958 communicates normally.

CONNECTORS: C-104, C-111, C-113

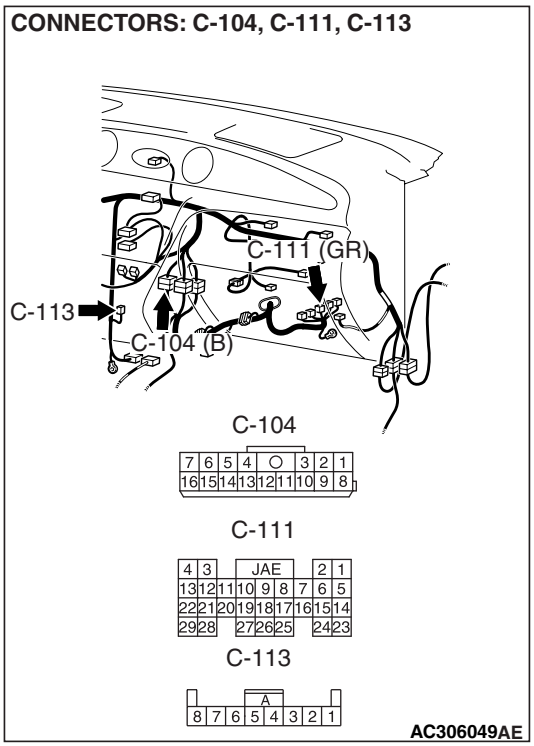

STEP 10. Replace the immobilizer-ECU, ECM <M/T> or PCM <A/T>.

Replace the immobilizer-ECU, ECM <M/T> or PCM <A/T>.

Q: Did the communication with the scan tool become possible after replacing the immobilizer-ECU, the ECM <M/T> or PCM <A/T>?

YES : Register the password (secret code) and encrypted code P.54A-34. Confirm that scan tool MB991958 communicates normally

NO : Go to Step 11.

STEP 11. Recheck for malfunction.

Q: Is a malfunction eliminated?

YES : The procedure is complete (If no malfunction are found in all steps, an intermittent malfunction is suspected. Refer to GROUP 00, How to Use Troubleshooting/Inspection Service Points –How to Cope with Intermittent Malfunction P.00-13).

NO : Replace the immobilizer-ECU or ECM <M/T> or PCM <A/T>. Then register the password (secret code) and encrypted code (Refer to P.54A-34).

INSPECTION PROCEDURE 2: The Ignition Key cannot be Registered.

TECHNICAL DESCRIPTION (COMMENT)

The ignition key transponder or the immobilizer-ECU is suspected to be defective.

TROUBLESHOOTING HINTS

- Malfunction of the ignition key
- Malfunction of immobilizer-ECU

DIAGNOSIS PROCEDURE

Required Special Tools:

- MB991223: Harness Set
- MB991958: Scan Tool (MUT-III Sub Assembly)
  - MB991824: Vehicles Communication Interface (V.C.I.)
  - MB991827: MUT-III USB Cable
  - MB991911: Main Harness A

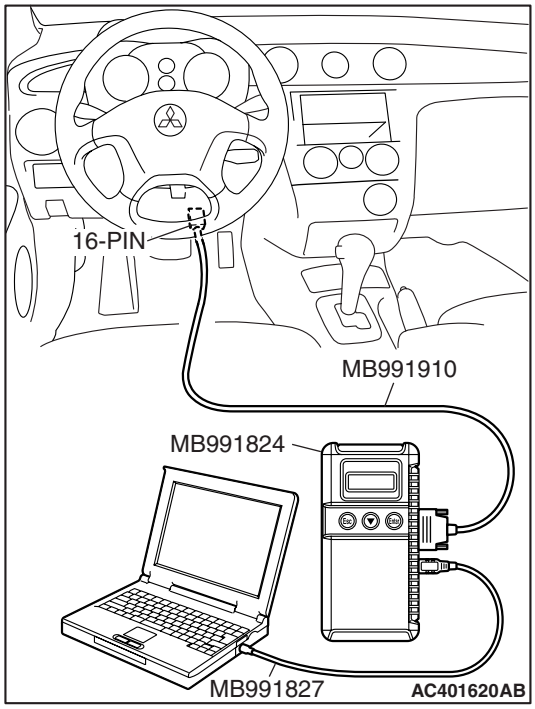

STEP 1. Using scan tool MB991958, read the diagnostic trouble code.

⚠ CAUTION

To prevent damage to scan tool MB991958, always turn the ignition switch to "LOCK" (OFF) position before connecting or disconnecting scan tool.

Use scan tool MB991958 to check if DTC 11 is set.

(1) Connect scan tool MB991958 to the data link connector.
(2) Turn the ignition switch "ON" position.
(3) Read the immobilizer system diagnostic trouble code.

Q: Does DTC11 reset?

YES : Refer to P.54A-11.

NO : Replace the ignition key that cannot be registered. Then re-register the encrypted code (Refer to P.54A-34). Verify that the ignition key can be registered, then Go to Step 2.

STEP 2. Retest the system.

Q: Does registered ignition key function properly?

YES : The procedure is complete (If no malfunction are found in all steps, an intermittent malfunction is suspected. Refer to GROUP 00, How to Use Troubleshooting/Inspection Service Points –How to Cope with Intermittent Malfunction P.00-13).

NO : Replace the immobilizer-ECU.

INSPECTION PROCEDURE 3: Engine Cranks, but does not Start.

TECHNICAL DESCRIPTION

If the engine cranks, but does not start, an MFI system problem may exist in addition to a malfunctioning immobilizer system. The engine will not start if the ignition key has not been properly registered.

TROUBLESHOOTING HINTS

- Malfunction of MFI system
- Malfunction of immobilizer-ECU

DIAGNOSIS PROCEDURE

Required Special Tools:

- MB991223: Harness Set
- MB991958: Scan Tool (MUT-III Sub Assembly)
  - MB991824: Vehicles Communication Interface (V.C.I.)
  - MB991827: MUT-III USB Cable
  - MB991911: Main Harness A

STEP 1. Check the battery voltage.

Measure the battery voltage during cranking.

Q: Is the voltage 8 volts or more?

YES : Go to Step 2.
NO : Check the condition of the battery. Refer to P.54A-4.

STEP 2. Using scan tool MB991958, read the diagnostic trouble code.

⚠ CAUTION

To prevent damage to scan tool MB991958, always turn the ignition switch to "LOCK" (OFF) position before connecting or disconnecting scan tool.

(1) Connect scan tool MB991958 to the data link connector.
(2) Turn the ignition switch "ON" position.
(3) Read the diagnosis code.

Q: Have any DTCs set?

Yes : Refer to P.54A-11.
No : Go to Step 3.

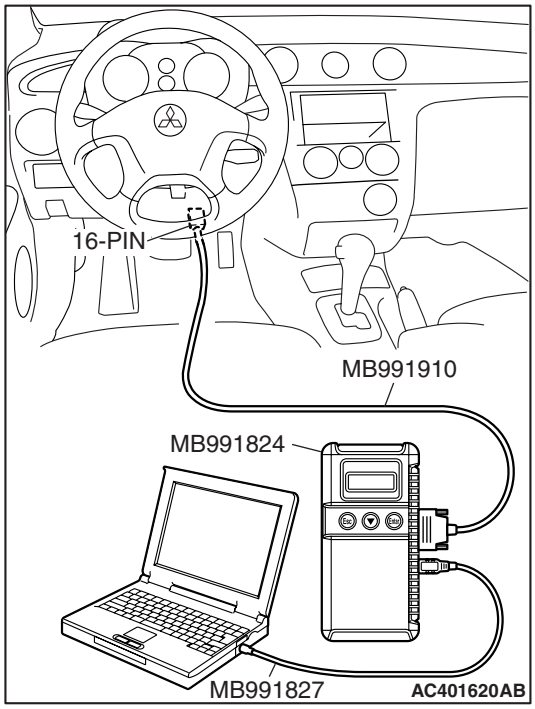

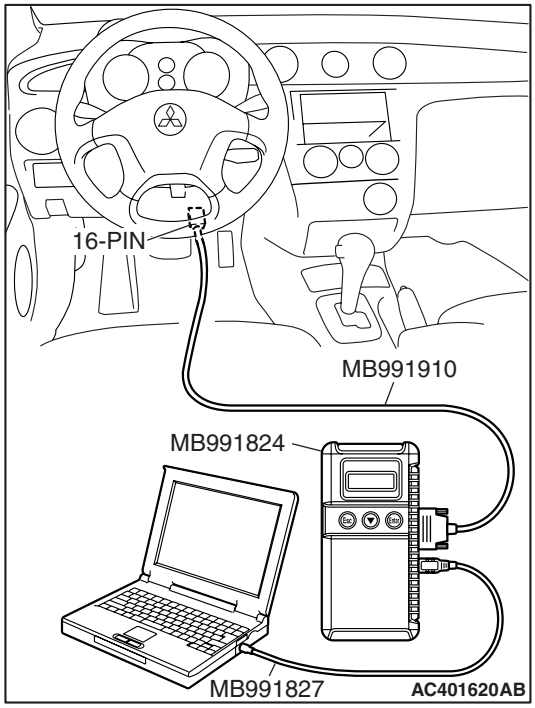

STEP 3. Using scan tool MB991958, read the diagnostic trouble code.

⚠ CAUTION

To prevent damage to scan tool MB991958, always turn the ignition switch to "LOCK" (OFF) position before connecting or disconnecting scan tool.

(1) Connect scan tool MB991958 to the data link connector.
(2) Turn the ignition switch "ON" position.
(3) Read the diagnosis code.

Q: Have any MFI system DTCs set?

Yes : Refer to GROUP 13A, Diagnosis P.13A-40.
No : Go to Step 4.

STEP 4. Attempt to start the engine.

Q: Does the engine start?

YES : The procedure is complete (If no malfunctions are found in all steps, an intermittent malfunction is suspected. Refer to GROUP 00, How to Use Troubleshooting/Inspection Service Points-How to Cope with Intermittent Malfunction P.00-13).

NO : Refer to GROUP 13A, Diagnosis –Symptom Chart P.13A-44. If the malfunction is not resolved, replace the immobilizer-ECU. Then register the password (secret code) and encrypted code (Refer to P.54A-34). The engine should now start.

INSPECTION PROCEDURE 4: The Immobilizer Indicator Light does not Illuminate.

The Security Indicator Circuit

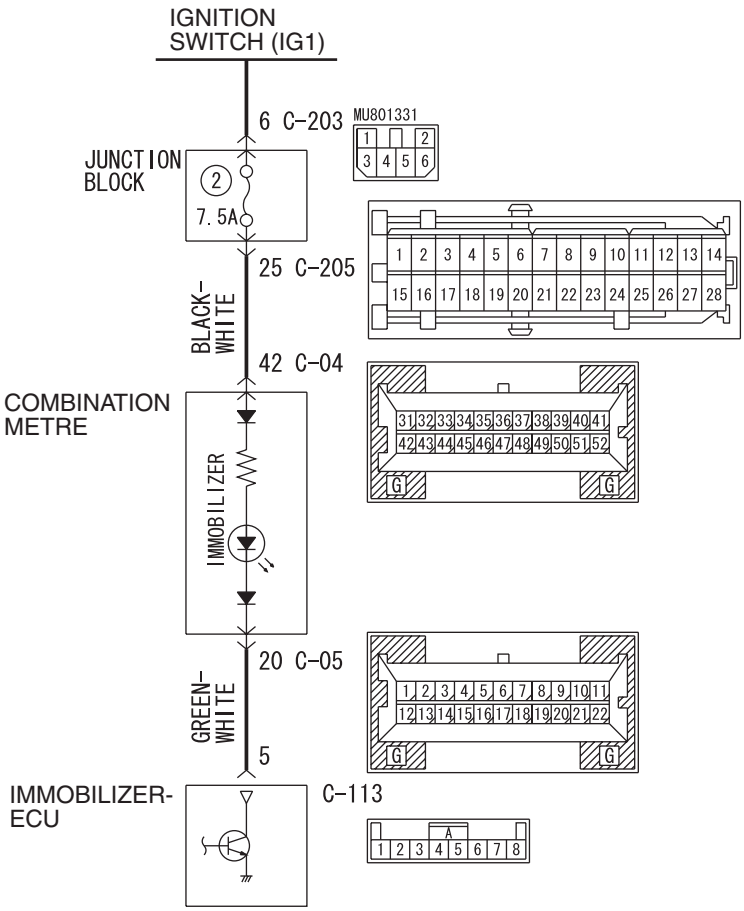

W4Z54M30AA

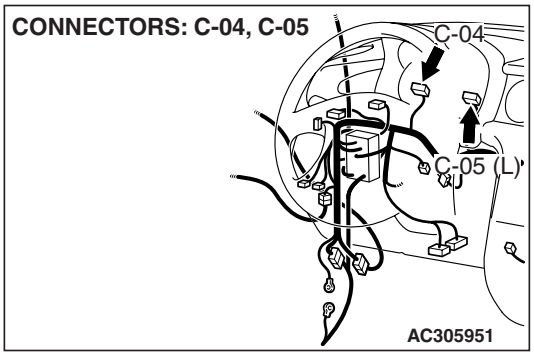

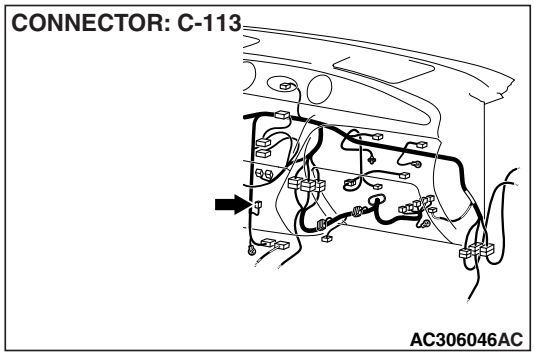

TSB Revision

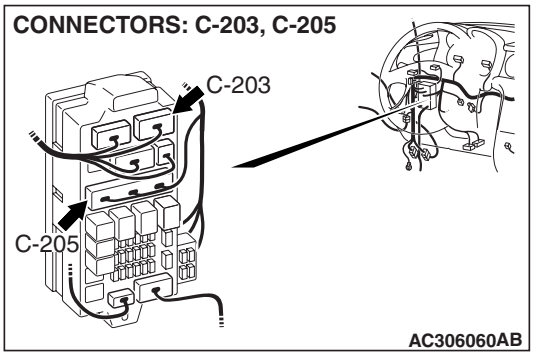

CIRCUIT OPERATION

If the requirements for starting the engine are not satisfied, the immobilizer-ECU flashes the immobilizer indicator for 30 seconds.

TECHNICAL DESCRIPTION (COMMENT)

The immobilizer indicator light or a malfunction of the combination meter or immobilizer-ECU.

TROUBLESHOOTING HINTS

- Malfunction of combination meter
- Malfunction of immobilizer-ECU
- Damaged harness wires or connectors

DIAGNOSIS PROCEDURE

Required Special Tool:

- MB991223: Harness Set

STEP 1. Check immobilizer-ECU connector C-113 for loose, corroded or damaged terminals, or terminals pushed back in the connector

Q: Is immobilizer-ECU connector C-113 in good condition?

YES : Go to Step 2.

NO : Repair or replace the damaged component(s). Refer to GROUP 00E, Harness Connector Inspection P.00E-2. Confirm that scan tool MB991958 communicates normally.

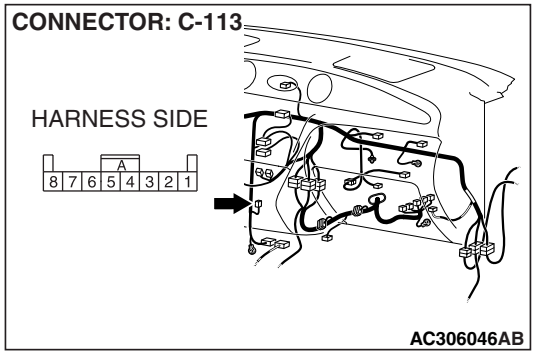

STEP 2. Check the immobilizer indicator light circuit of immobilizer-ECU connector C-113.

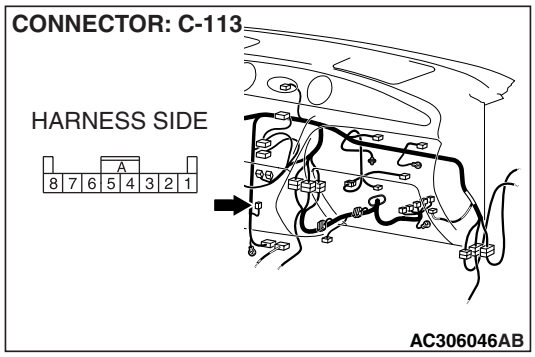

(1) Disconnect the immobilizer-ECU C-113 and measure at the harness side.
(2) Turn the ignition switch to the "ON" position.

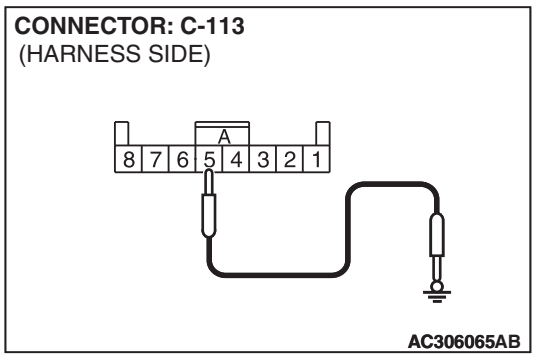

(3) Connect terminal 5 to the ground.

Q: Does only the immobilizer indicator light illuminate? (other indicator lights are in good condition)

YES : Replace the immobilizer-ECU. Then register the password (secret code) and encrypted code P.54A-34.

NO : Go to Step 3.

STEP 3. Check immobilizer-ECU connector C-113 and combination meter connector C-05 for loose, corroded or damaged terminals, or terminals pushed back in the connector.

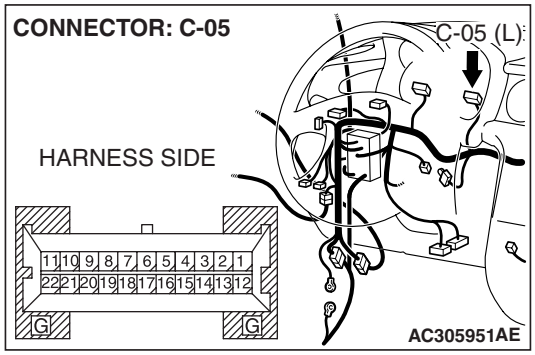

Q: Are immobilizer-ECU connector C-113 and combination meter connector C-05 in good condition?

YES : Go to Step 4.

NO : Repair or replace the damaged component(s). Refer to GROUP 00E, Harness Connector Inspection P.00E-2. Confirm that scan tool MB991958 communicates normally.

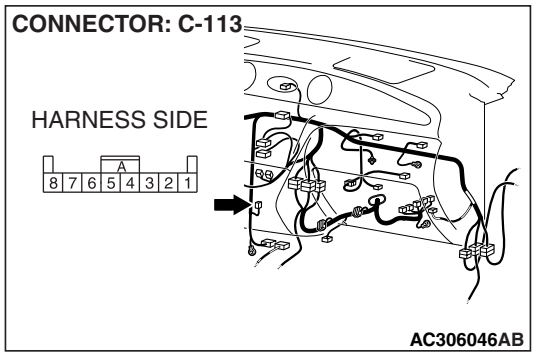

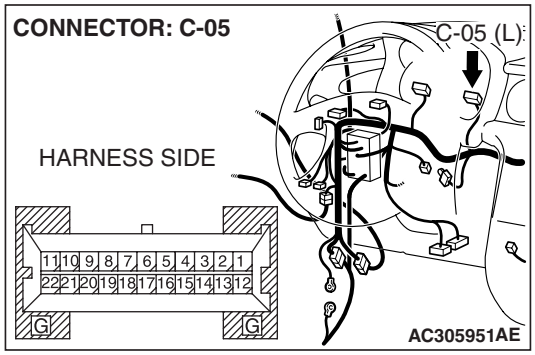

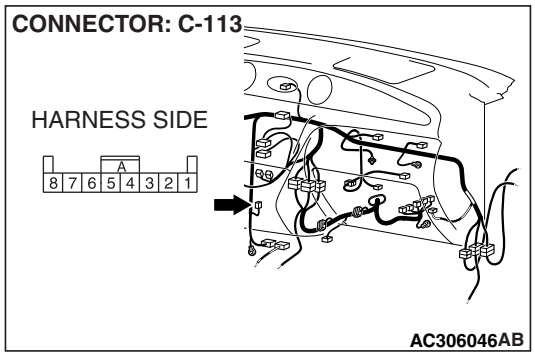

STEP 4. Check the wiring harness between combination meter connector C-05 (terminal 20) and immobilizer-ECU connector C-113 (terminal 5).

Q: Is the wiring harness between combination meter connector C-05 (terminal 20) and immobilizer-ECU connector C-113 (terminal 5) in good condition?

YES : Go to Step 5.

NO : Repair the wiring harness. Check to see that all meters operate.

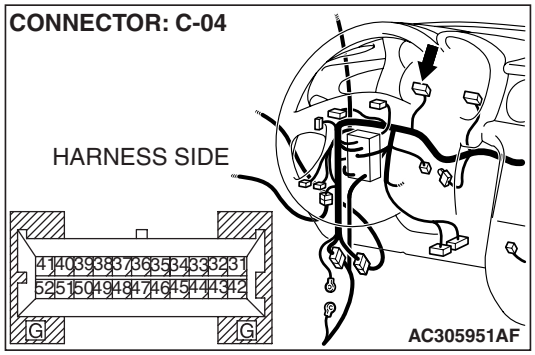

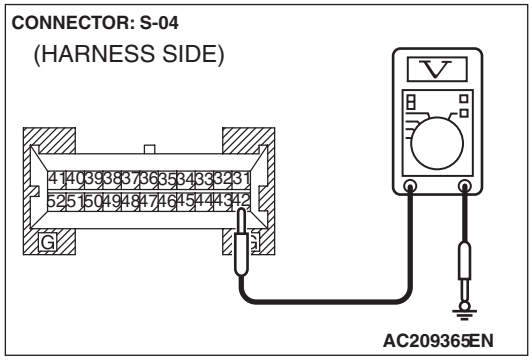

STEP 5. Measure the voltage at combination meter connector C-04 in order to check the battery circuit of power supply system to the combination meter.

(1) Turn the ignition switch to the "OFF" (LOCK) position.

(2) Disconnect combination meter connector C-04, and measure at the wiring harness side.

(3) Measure the voltage between terminal 42 and ground.

- The measured value should be approximately 12 volts (battery positive voltage).

Q: Does the measured voltage correspond with this range?

YES : Go to Step 8.

NO : Go to Step 6.

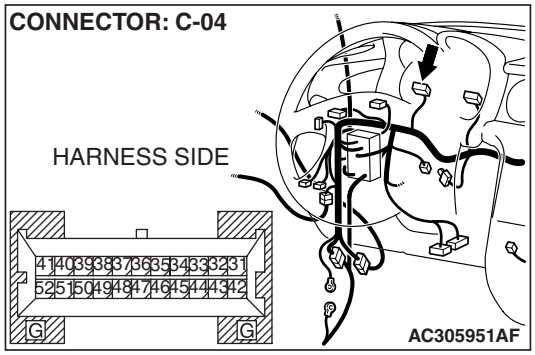

STEP 6. Check combination meter connector C-04 for loose, corroded or damaged terminals, or terminals pushed back in the connector.

Q: Is combination meter connector C-04 in good condition?

YES : Go to Step 7.

NO : Repair or replace the damaged component(s). Refer to GROUP 00E, Harness Connector Inspection P.00E-2. Check to see that all meters operate.

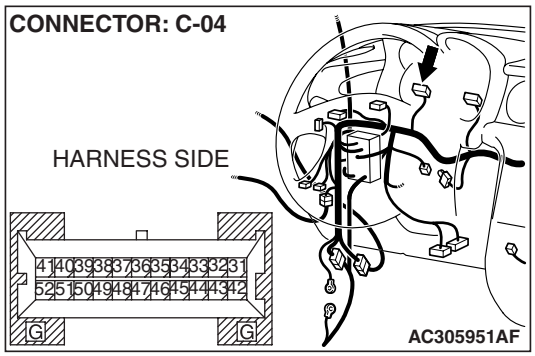

STEP 7. Check the wiring harness between combination meter connector C-04 (terminal 42) and the battery.

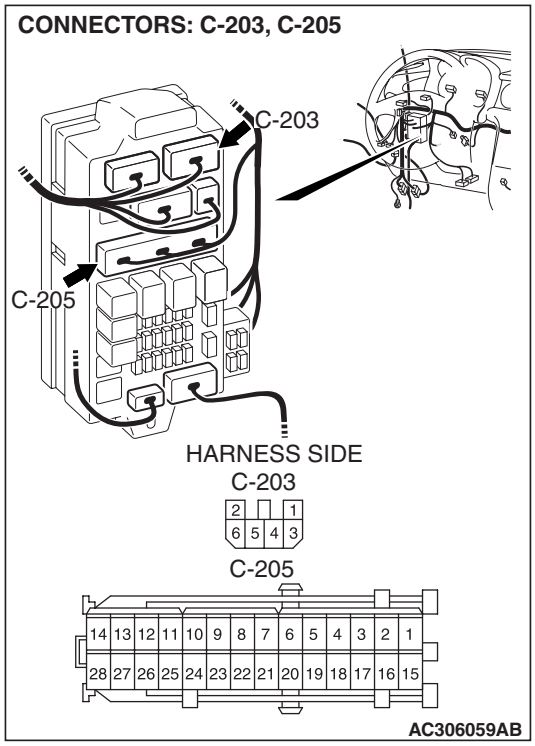

NOTE: Also check junction block connector C-205, C-203 for loose, corroded, or damaged terminals, or terminals pushed back in the connector. If junction block connector C-205, C-203 is damaged, repair or replace it. Refer to GROUP 00E, Harness Connector Inspection P.00E-2.

Q: Is the wiring harness between combination meter connector C-04 (terminal 42) and the battery in good condition?

YES : Go to Step 8.

NO : Repair the wiring harness. Check to see that all meters operate.

STEP 8. Retest the system.

Q: Is the malfunction eliminated?

YES : The procedure is complete. (If no malfunctions are found in all steps, an intermittent malfunction is suspected. Refer to GROUP 00, How to Use Troubleshooting/Inspection Service Point –How to Cope with Intermittent Malfunction P.00-13).

NO : Go to Step 1.

SPECIAL TOOLS

M1543000602398

TOOL	TOOL NUMBER AND NAME	SUPERSESSION	APPLICATION
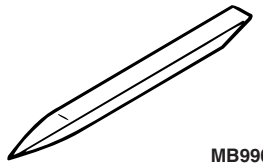 MB990784	MB990784 Ornament remover	General service tool	Removal of column cover
A 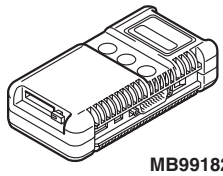 MB991824 B 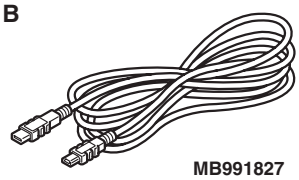 MB991827 C 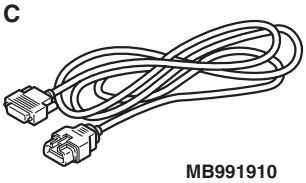 MB991910 D 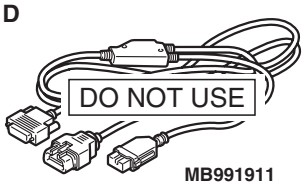 MB991911 E 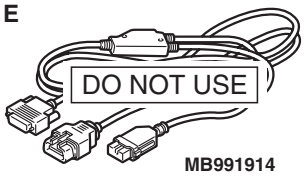 MB991914 F 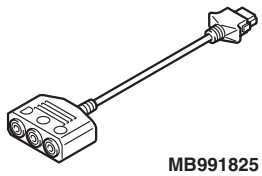 MB991825 G 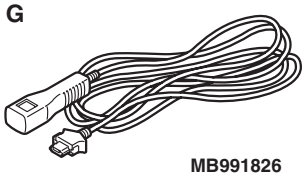 MB991826 MB991958	MB991958 A: MB991824 B: MB991827 C: MB991910 D: MB991911 E: MB991914 F: MB991825 G: MB991826 MUT-III Sub Assembly A: Vehicle Communication Interface B: MUT-III USB Cable C: MUT-III Main Harness A (Vehicles with CAN communication system) D: MUT-III Main Harness B (Vehicles without CAN communication system) E: MUT-III Main Harness C (for Daimler Chrysler models only) F: MUT-III Adapter Harness G: MUT-III Trigger Harness	MB991824-KIT *NOTE: G: MB991826 MUT-III Trigger Harness is not necessary when pushing V.C.I. ENTER key.*	Reading diagnostic trouble code **⚠ CAUTION** **For vehicles with CAN communication, use MUT-III main harness A to send simulated vehicle speed. If you connect MUT-III main harness B instead, the CAN communication does not function correctly.** *NOTE: This vehicle supports only the CAN communication between the SRS-ECU and the MUT-III.*

TOOL	TOOL NUMBER AND NAME	SUPERSESSION	APPLICATION
A B C D DO NOT USE MB991223AZ	MB991223 A: MB991219 B: MB991220 C: MB991221 D: MB991222 Harness set A: Test harness B: LED harness C: LED harness adapter D: Probe	General service tools	Making voltage and resistance measurements during troubleshooting A: Connect pin contact pressure inspection B: Power circuit inspection C: Power circuit inspection D: Commercial tester connection
MB992006	MB992006 Extra fine probe	General service tool	Making voltage and resistance measurement during troubleshooting

ON-VEHICLE SERVICE

HOW TO REGISTER ENCRYPTED CODE

M1543008100681

Required Special Tools:

- MB991958: Scan Tool (MUT-III Sub Assembly)
  - MB991824: Vehicles Communication Interface (V.C.I.)
  - MB991827: MUT-III USB Cable
  - MB991911: MUT-III Main Harness A

⚠ CAUTION

Because registering the encrypted codes is done after all previously-registered codes have been erased, you should keep all of the ignition keys that have already been registered accessible.

If the ignition key, immobilizer-ECU, ECM <M/T> or PCM <A/T> is replaced or an ignition key is added, encrypted codes of all the ignition keys must be registered (A maximum of eight different ignition key can be registered). Moreover, when the immobilizer-ECU has been replaced, you will need to use scan tool MB991958 to register the immobilizer-ECU and input the vehicle secret code and to register the password (secret code) that the owner specifies into the immobilizer-ECU.

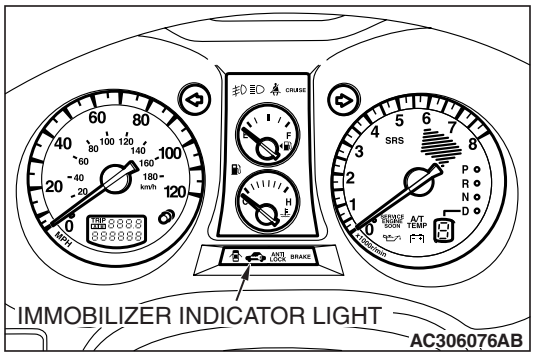

If an attempt is made to start the engine with an unregistered ignition key, cranking occurs, but fuel supply is cut off to disable the engine. In approx. 10 seconds, the theft-alarm indicator will blink for approx. 30 seconds.

NOTE: PCM has an encrypted code for immobilizer-ECU, and the encrypted code is registered in the immobilizer-ECU and ignition key.

POINTS TO NOTE DURING OPERATION

If none of the functions can be used, check the diagnostic trouble codes, and after carrying out any necessary repairs, repeat the operation.

If an incorrect password is input five times in a row, the immobilizer-ECU judges that an unauthorized operation is being attempted. Start-prevention mode will be set, and engine operation will stop and all special functions will be disabled. If the ignition switch is turned to "ON" position and left in that position for approximately 20 minutes, "Unauthorized operation, start-prevention mode" will be cancelled.

KEY ID REGISTRATION

All ignition keys can be registered with scan tool MB991958. Additional ignition keys can be registered with or without scan tool MB991958.

Registration with scan tool MB991958

⚠ CAUTION

To prevent damage to scan tool MB991958, always turn the ignition switch to the "LOCK" (OFF) position before connecting or disconnecting scan tool MB991958.

NOTE:

- *Before registration, check that no DTC code is set. If a DTC code is set, resolve the problem beforehand.*
- *Using the key ID register function will cause all key IDs that have been previously registered in the immobilizer-ECU to be erased. All keys need to be registered. Those which have been registered before should be on hand before using this function.*
- *If registering more than one key, do not disconnect scan tool MB991958 halfway through the registration process.*
- *After registering key IDs, check that the engine can be started using all of the keys that have been registered. If the engine will not start, refer to Immobilizer System Diagnosis* *P.54A-11**.*

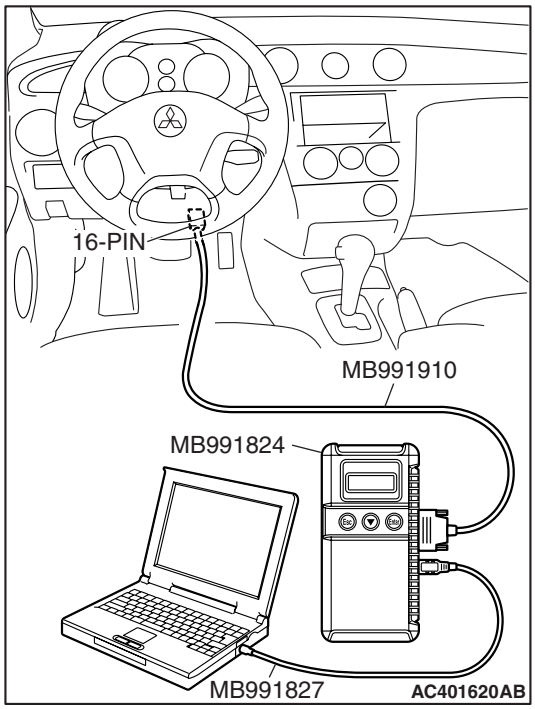

1. Connect the scan tool MB991958 to the data link connector.
2. Turn the ignition switch to "ON" position.
3. Select "Interactive Diagnosis" from the start-up screen.

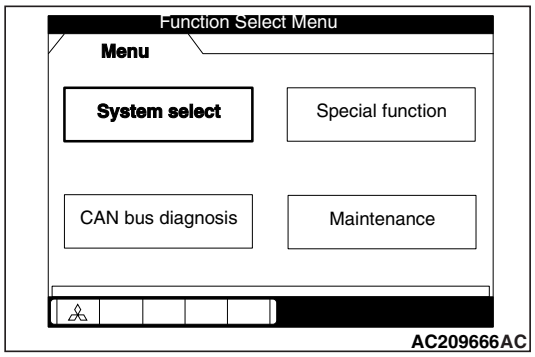

4. Select "System select."

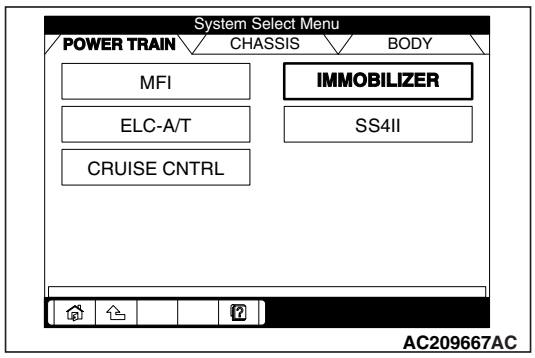

5. Choose "IMMOBILIZER" from the "POWER TRAIN" tab.

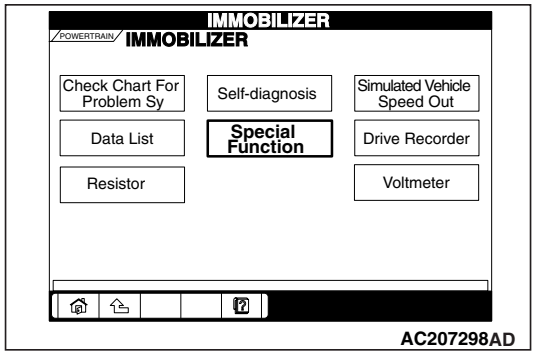

6. Choose "Special Function" from "IMMOBILIZER" screen.

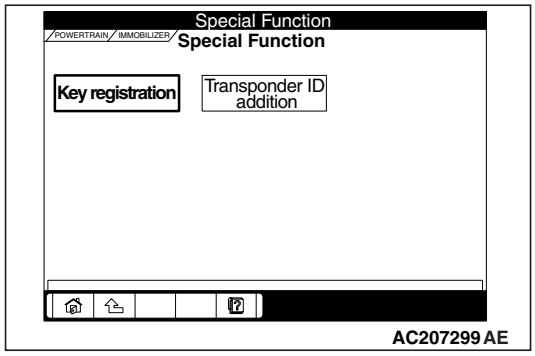

7. Choose "Key registration" from "Special Function" screen.

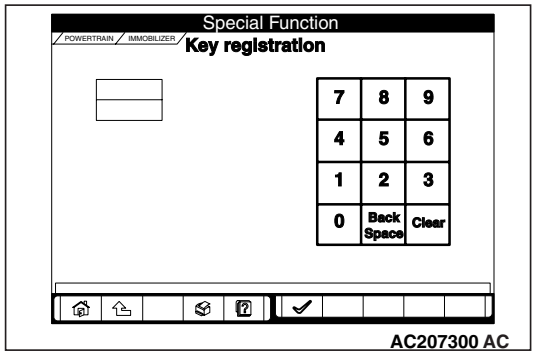

8. Enter the vehicle's password (secret code) on the "Key registration" screen, and then click the check mark icon. Follow the prompts on the screen to insert key(s) into the ignition switch to begin key registration.

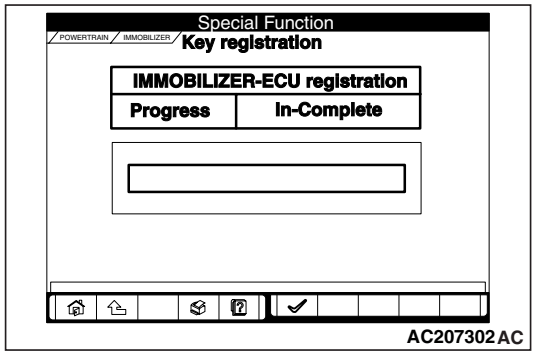

9. If the key ID was registered successfully, "Progress" indication will turn active (gray). Then the registration process completes. If the key ID failed to be registered, "In-Complete" indication will turn active (gray).
10. The number of keys currently registered will be displayed. To register an additional key, replace the ignition key with the next key to be registered within five seconds. Key ID registration screen will be displayed, then register another key.

    NOTE: A maximum of eight different keys can be registered.
11. This completes the registration operation. Turn the ignition switch "LOCK" (OFF) and leave it off for approximately ten seconds.
12. Check that the engine can be started with each of the ignition keys.
13. Check that the immobilizer system DTC and MFI system DTC did not set.
14. If not DTC is shown, terminate the scan tool MB991958.
15. Turn the ignition switch to "LOCK" (OFF) position.
16. Disconnect scan tool MB991958.

Registration of additional keys with the scan tool

Additional key(s) can be registered with the scan tool while keeping all existing key data.

⚠ CAUTION

To prevent damage to scan tool MB991958, always turn the ignition switch to "LOCK" (OFF) position before connecting or disconnecting scan tool MB991958.

NOTE: To register additional keys with the scan tool, no registered keys must be lost.

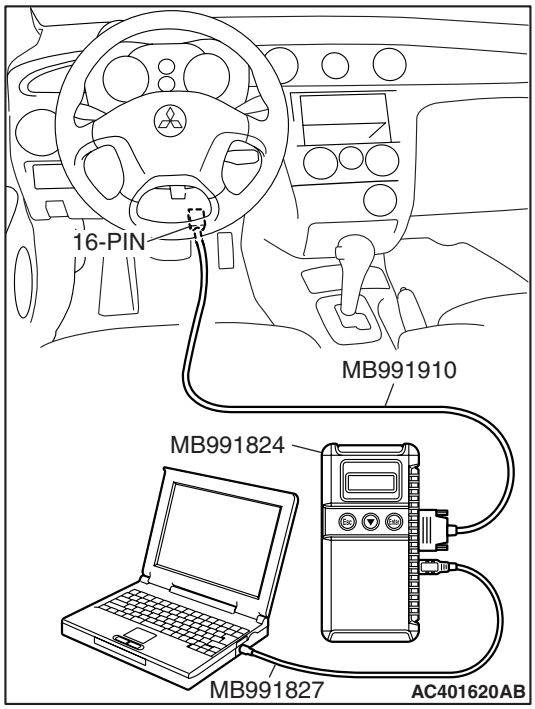

1. Connect scan tool MB991958 to the 16-pin data link connector.
2. Turn the ignition switch to "ON" position.

NOTE: Before registration, check that no DTC code is set. If a DTC code is set, resolve the problem beforehand.

3. Carry out steps 3 to 6 of the sub-section "Registration with scan tool."

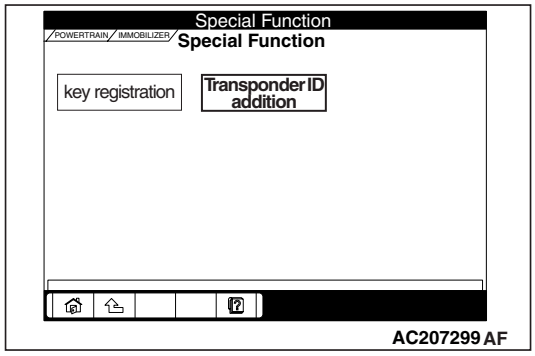

4. Choose "Transponder ID addition" from "Special Function" screen.

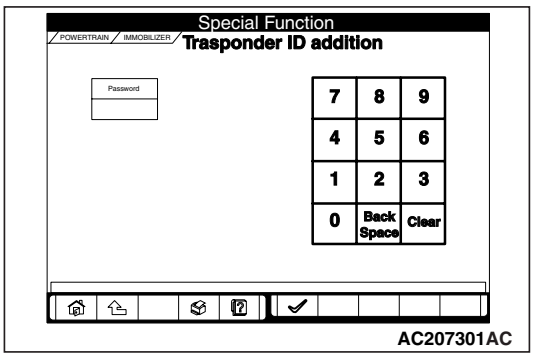

5. Enter the vehicles password (secret code) on the "Transponder ID addition" screen, and then click the check mark icon.

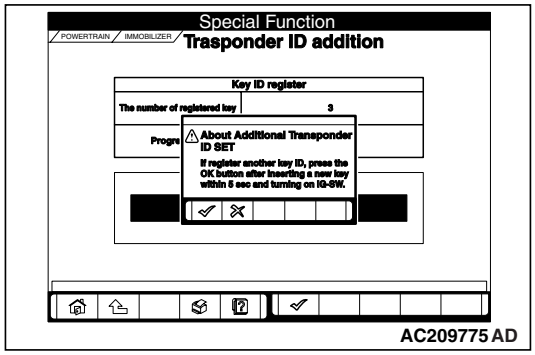

6. If an additional registration is made successfully, the screen will ask if another key is registered or not. If the third ignition key is registered, remove the key, which has been registered. Then insert the third key within five seconds, and then turn it to the ON position.
7. Register the additional ignition key according to step 6 above. The number of the registered ignition keys are shown on "The number of registered key" screen.

   NOTE: A maximum of eight different keys can be registered.

8. This completes the registration operation. Turn the ignition switch "LOCK" (OFF) and leave it off for approximately ten seconds.
9. Check that the engine can be started with each of the ignition keys.
10. Check that the immobilizer system DTC and MFI system DTC did not set.
11. If not DTC is shown, terminate the scan tool MB991958.
12. Turn the ignition switch to "LOCK" (OFF) position.
13. Disconnect scan tool MB991958.

Registration of additional key(s) without using the scan tool

If the scan tool is not available, new key(s) can be registered by operating two keys which have been registered to the vehicle (A maximum of eight keys can be registered to one vehicle). Follow the procedure below to register new key(s) to the vehicle.

NOTE: The registered key is the key that allows you to start the engine.

1. Turn "ON" the ignition switch by using the first registered key (key A), and wait for five seconds.
2. Remove the first registered key (key A).
3. Insert the second registered ignition key (key B), and turn it to the ON position.

Registration of additional keys without using the scan tool

Operate two registered ignition keys by the following procedure, call additional registration mode for the immobilizer-ECU, then register an additional ignition key by operating it. Additional ignition keys can be registered without using the MUT-III by operating two ignition keys that already have been registered to the vehicle and operating an additional key to be registered (A maximum of eight ignition keys can be registered).

1. The ignition switch is "ON" by using he first key (KEY A) which has already been registered to the vehicle.
2. If the first key (KEY A) is correct, the immobilizer-ECU begins the condition of waiting the second key (KEY B) which has already been registered to the vehicle. The ignition switch has been on the "ON" position for longer than 5 seconds so that enters the condition of waiting the second key (KEY B).
3. After the ignition switch is "LOCK" (OFF), it is "ON" by the second key (KEY B) which has already been registered to the vehicle.

   The second key (KEY B) must be turned on within 7 seconds of removing the first key.

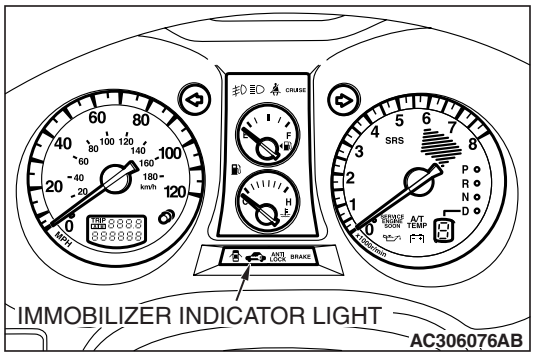

4. After approximately 10 seconds the "SECURITY" indicator light should flash, and then additional registration mode is entered.
5. Check the "SECURITY" indicator light flashes, and then remove the second registered key (key B).
6. Insert the third ignition key, and turn it to the ON position.
7. The immobilizer-ECU identifies the new key to accept or reject it, and operates the "SECURITY" indicator (See the table below).

THE NEW KEY IS:	REGISTRATION IS:	"SECURITY" INDICATOR:	
		OPERATION	TIMING
Not registered yet	Accepted	Illuminates for three seconds	In approximately three seconds after the ignition key(s) have been registered
Already registered	Rejected	Illuminates for three seconds	In approximately three seconds after the ECU judges that the keys have been registered
Read error	Rejected	Extinguished	After the ECU detects a read error

8. If a new ignition key is registered further, repeat steps 1 to 7 above.
   A maximum of eight ignition keys can be registered to one vehicle (If you attempt to register the ninth key, the immobilizer-ECU rejects the key). If any of the following conditions are satisfied, the additional key registration mode will terminate:
   - The ignition switch has been on for more than 30 seconds.
   - After the ignition key has been turned to the "LOCK" (OFF), the engine control relay is turned off.
   - The scan tool has started communicating with vehicle systems.
9. After the registration mode has terminated, the additionally registered key(s) should allow you to start the engine.

TRANSPONDER LOCK CHECK

M1543024100249

Required Special Tools:

- MB991958: Scan Tool (MUT-III Sub Assembly)
  - MB991824: Vehicles Communication Interface (V.C.I.)
  - MB991827: MUT-III USB Cable
  - MB991911: MUT-III Main Harness A

⚠ CAUTION

To prevent damage to scan tool MB991958, always turn the ignition switch to "LOCK" (OFF) position before connecting or disconnecting scan tool MB991958.

Follow the procedure below to judge if the ignition key can be overwritten (i.e. the ignition key is correct) or not.

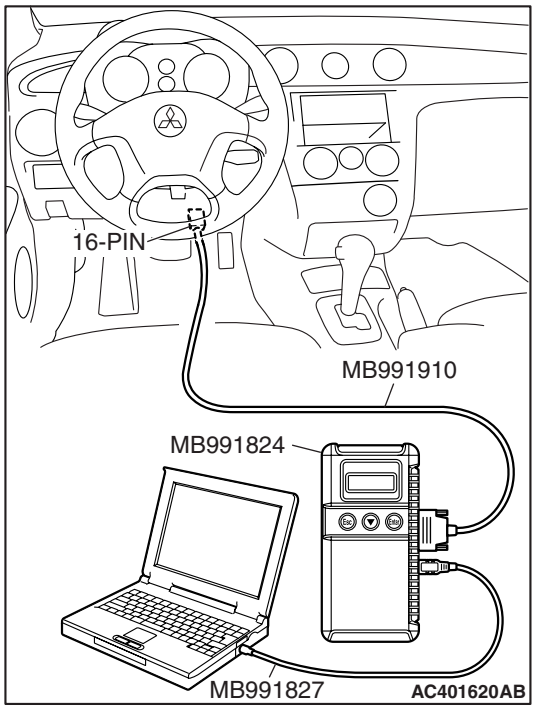

1. Connect the scan tool MB991958 to the data link connector.
2. Turn the ignition switch to "ON" position.
3. Select "Interactive Diagnosis" from the start-up screen.

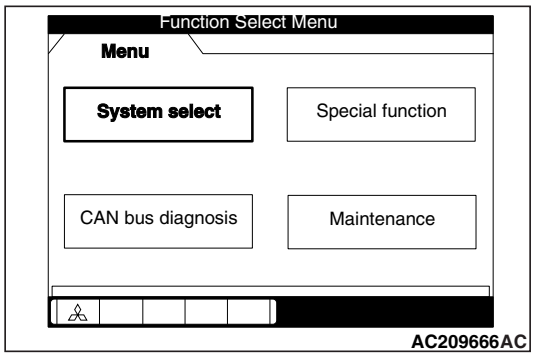

4. Select "System select."

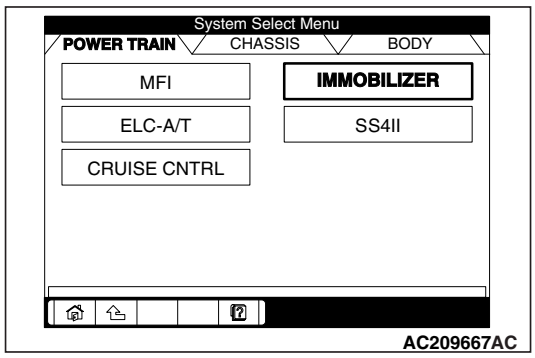

5. Choose "IMMOBILIZER" from the "POWER TRAIN" tab.

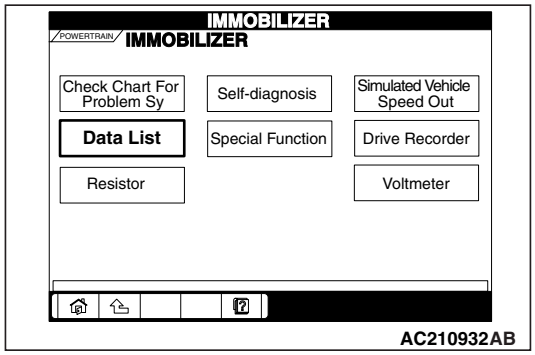

6. Select "Data List."

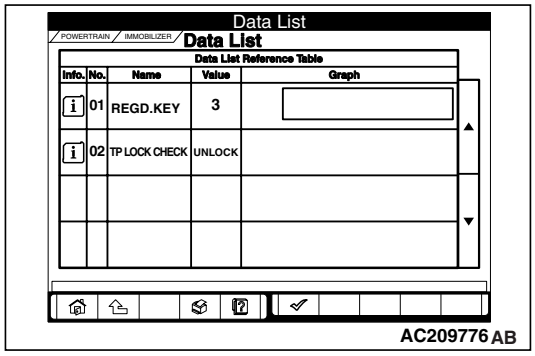

7. The multi-center display shows whether the ignition key, which has been inserted in the switch, can be rewritten and how many ignition keys have ever been registered.

TP LOCK CHECK	IGNITION KEY:	JUDGMENT OF IGNITION KEY
UNLOCK	Can be overwritten	Correct
LOCK	Can not be overwritten	Incorrect

IGNITION SWITCH

REMOVAL AND INSTALLATION

M1543002100917

⚠ ***WARNING***

- ***Before removal of the air bag module, refer to GROUP 52B, SRS Service Precautions (P.52B-29) and Air Bag Module(s) and Clock Spring (P.52B-355).***
- ***When removing and installing the steering wheel, do not let it bump against the air bag module.***

Post-installation Operation
Register the encrypted code (Refer to P.54A-34).

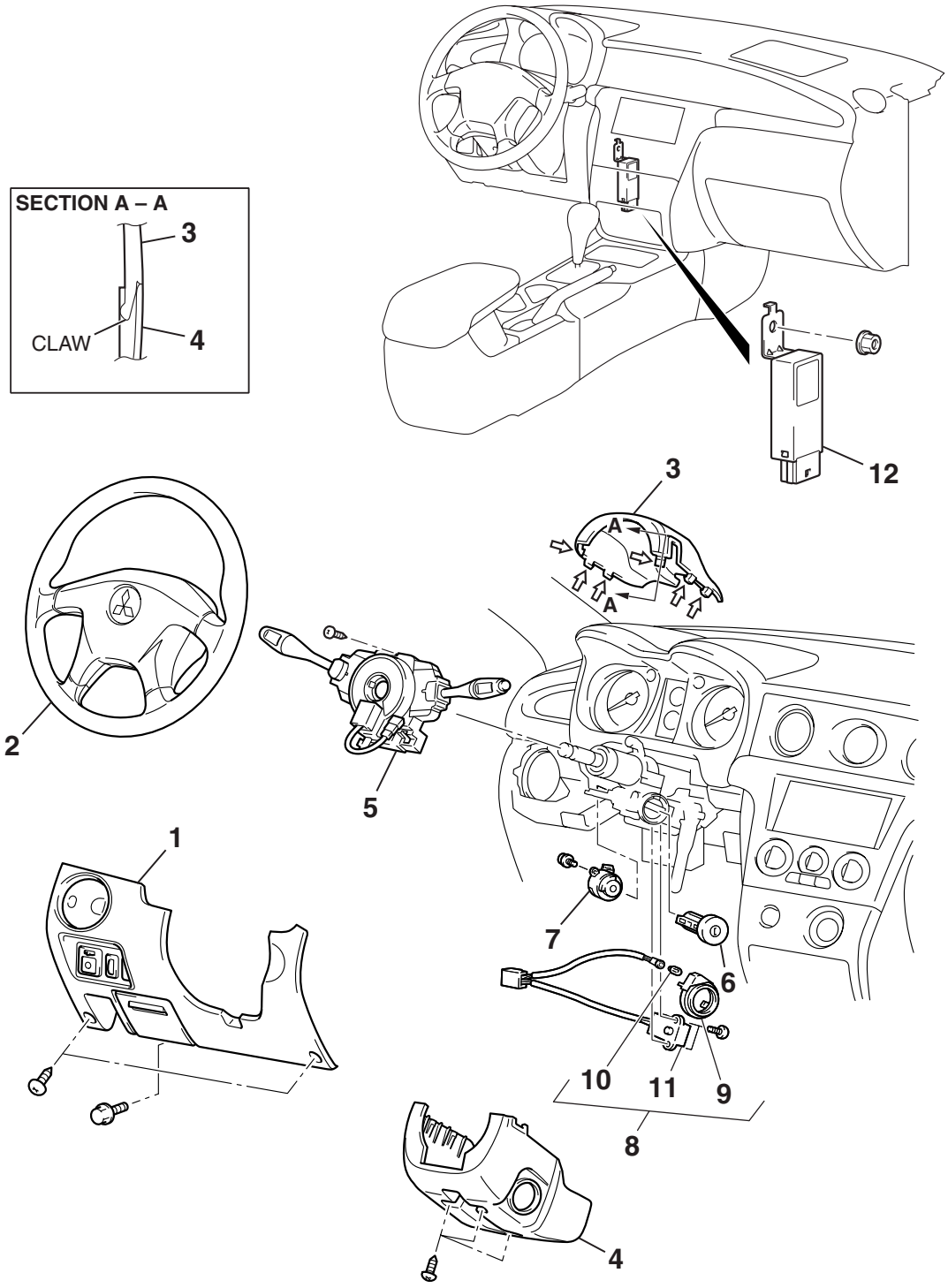

AC401746 AB

TSB Revision

IGNITION SWITCH REMOVAL STEPS

1. INSTRUMENT LOWER PANEL
2. STEERING WHEEL (REFER TO GROUP 37, POWER STEERING P.37-22)
3. COLUMN COVER UPPER
4. COLUMN COVER LOWER
5. CLOCK SPRING AND COLUMN SWITCH ASSEMBLY

<<A>> 6. STEERING LOCK CYLINDER

- IGNITION SWITCH CONNECTOR

7. IGNITION SWITCH

- KEY REMINDER SWITCH CONNECTOR

IGNITION SWITCH REMOVAL STEPS (Continued)

8. ILLUMINATION RING, BULB AND KEY REMINDER SWITCH ASSEMBLY
9. ILLUMINATION RING
10. BULB
11. KEY REMINEDER SWITCH

IMMOBILIZER-ECU REMOVAL STEPS

- CENTER PANEL (REFER TO GROUP 52A, INSTRUMENT PANEL ASSEMBLY P.52A-18)

12. IMMOBILIZER-ECU

REMOVAL SERVICE POINT

<<A>> STEERING LOCK CYLINDER REMOVAL

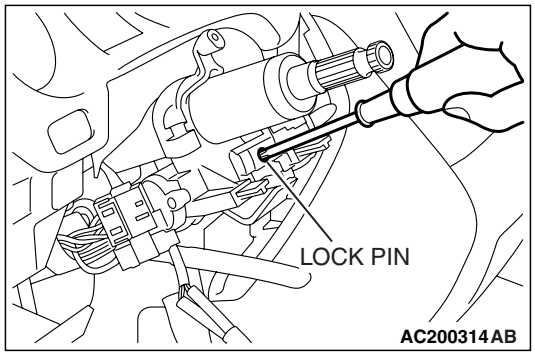

1. Insert the key in the steering lock cylinder and turn it to the "ACC" position.
2. Using a small Phillips head screwdriver, pull the steering lock cylinder toward you.

INSPECTION

M1544009700087

IGNITION SWITCH CONTINUITY CHECK

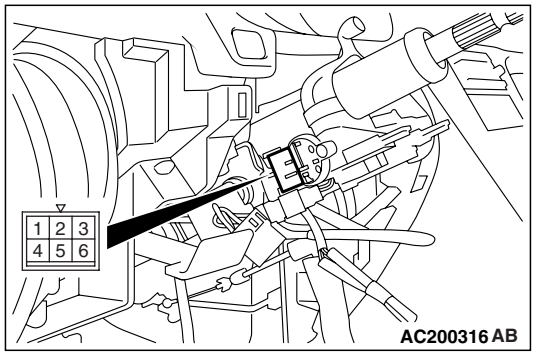

Disconnect ignition switch connector C-303 without removing the ignition switch. Then check the continuity.

SWITCH POSITION	TESTER CONNECTION	SPECIFIED CONDITION
"LOCK" (OFF)	1 –2, 1 –3, 1 –4, 1–5, 1 –6, 2 –3, 2 –4, 2–5, 2 –6, 3 –4, 3–5, 3 –6, 4–5, 4 –6, 5 –6	Open circuit
"ACC"	1 –6	Less than 2 ohms
"ON"	1 –2, 1 –4, 1 –6, 2 –4, 2 –6, 4 –6	Less than 2 ohms
"START"	1 –2, 1 –5, 2 –5	Less than 2 ohms

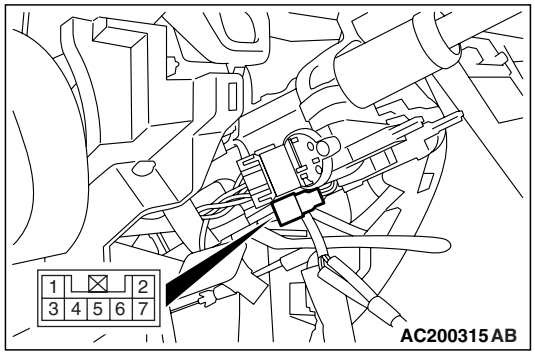

KEY REMINDER SWITCH CONTINUITY CHECK

Disconnect key reminder switch connector C-304 without removing the ignition switch and key reminder switch. Then check the continuity.

STATUS OF IGNITION KEY	TESTER CONNECTION	SPECIFIED CONDITION
Removed	4 –6	Less than 2 ohms
Inserted	4 –6	Open circuit

COMBINATION METER ASSEMBLY AND VEHICLE SPEED SENSOR

COMBINATION METER DIAGNOSIS

M1543009900839

All vehicles are equipped with an electrical speedometer and tachometer. If the speedometer or tachometer does not function, there may be trouble in the electrical system.

TROUBLESHOOTING STRATEGY

M1543006900454

Use these steps to plan your diagnostic strategy. If you follow them carefully, you will be sure that you have exhausted most of the possible ways to find a combination meter fault.

1. Gather information from the customer.
2. Verify that the condition described by the customer exists.
3. Find the malfunction by following the symptom chart.
4. Verify the malfunction is eliminated.

SYMPTOM CHART

M1543007201688

SYMPTOM	INSPECTION PROCEDURE	REFERENCE PAGE
Speedometer does not work. <A/T>	1	P.54A-47
Speedometer does not work. <M/T>		P.54A-51
Tachometer does not work.	2	P.54A-60
Fuel gauge does not work.	3	P.54A-64
Engine coolant temperature gauge does not work.	4	P.54A-75
Combination meters does not work.	5	P.54A-79

SYMPTOM PROCEDURES

INSPECTION PROCEDURE 1: Speedometer does not Work. <A/T>

Speedmeter Circuit <A/T>

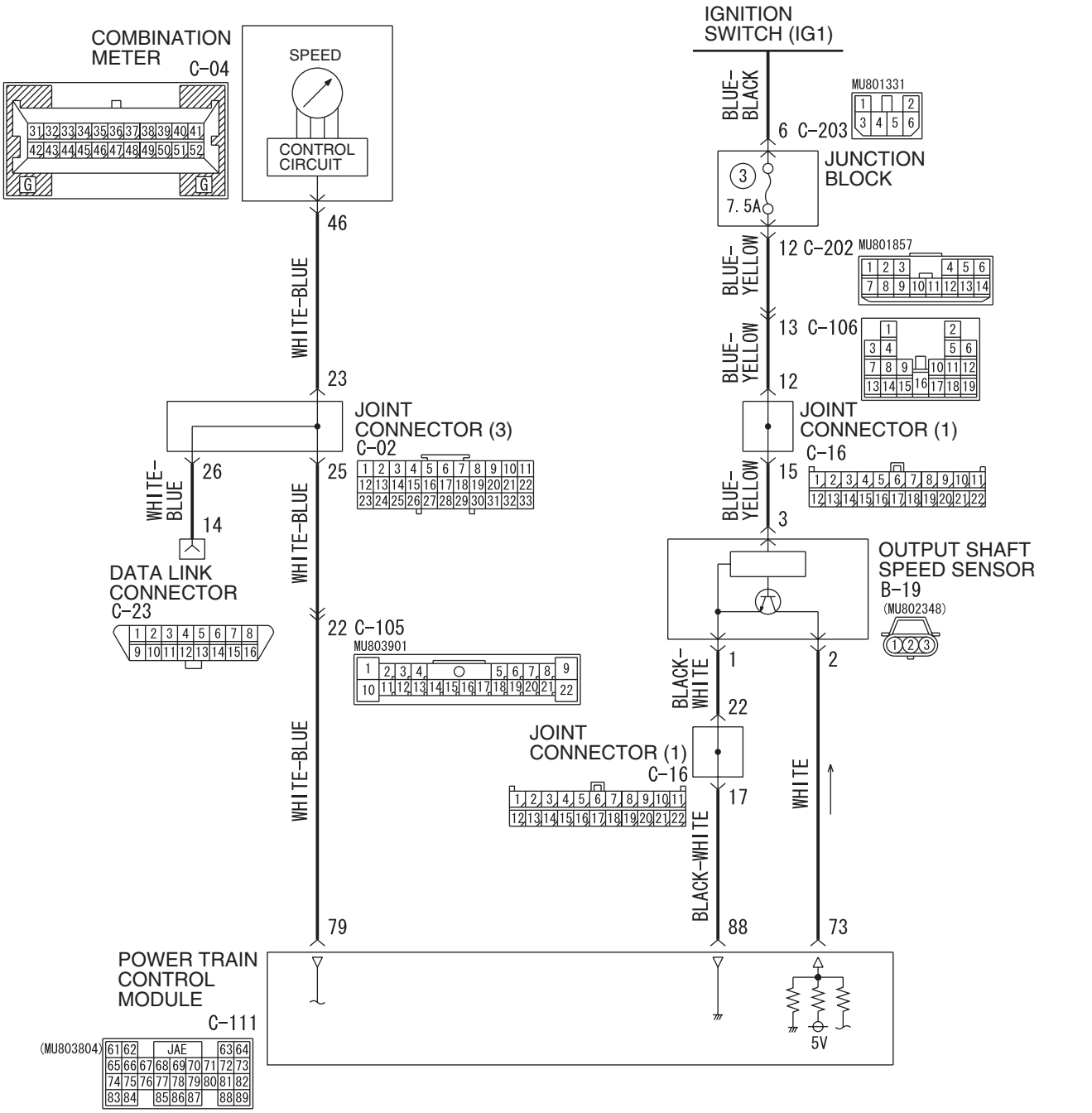

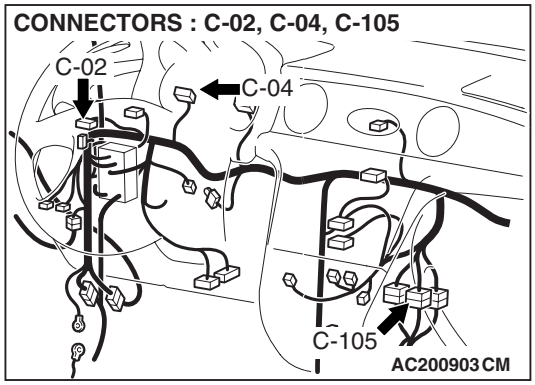

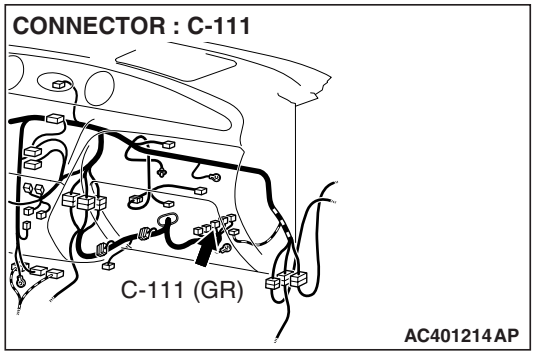

CIRCUIT OPERATION

- The ignition switch (IG1) circuit is the power source for the speedometer and output shaft speed sensor.
- The output shaft speed sensor is incorporated in the transaxle. The signals from the output shaft speed sensor are referenced for PCM to send a vehicle speed signal to the speedometer. The speedometer calculates the vehicle speed signal to operate the needle of the meter. At the same time, the travel distance is calculated.

TECHNICAL DESCRIPTION (COMMENT)

The cause may be due to malfunction of the output shaft speed sensor circuitry, PCM or speedometer. The output shaft speed sensor is also used by the powertrain control module (PCM), auto-cruise control-ECU.

TROUBLESHOOTING HINTS

- Malfunction of the output shaft speed sensor
- Malfunction of the combination meter (printed-circuit board or speedometer and tachometer)
- Malfunction of the PCM
- Damaged wiring harness or connectors

DIAGNOSIS

Required Special Tools:

- MB991223: Harness Set
- MB991958: Scan Tool (MUT-III Sub Assembly)
  - MB991824: Vehicle Communication Interface (V.C.I.)
  - MB991827: MUT-III USB Cable
  - MB991910: MUT-III Main Harness A

STEP 1. Check with other meter.

Check to see that the tachometer, fuel gauge and water thermometer are operating normally.

Q: Do all other meters operate?

YES <other meters all operate.> : Go to Step 2.

NO <one of the meters do not operate.> : Refer to INSPECTION PROCEDURE 5 P.54A-79.

STEP 2. Using scan tool MB991958, read the MFI system diagnostic trouble code.

⚠ CAUTION

To prevent damage to scan tool always turn the ignition switch to "LOCK" (OFF) position before connecting or disconnecting scan tool MB991958.

(1) Connect scan tool MB991958 to the data link connector.
(2) Turn the ignition switch to the "ON" position.
(3) Read the MFI system diagnostic trouble code.

Q: Is DTC P0720 output?

YES : Refer to GROUP 13A, Multiport Fuel Injection (MFI) Diagnosis.P.13A-40

NO : Go to Step 3.

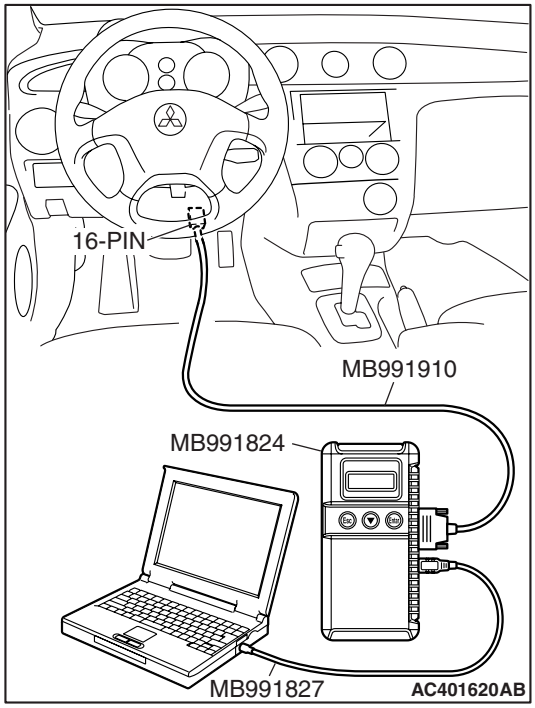

STEP 3. Check combination meter connector C-04 and PCM connector C-111 for damage.

Q: Are combination meter connector C-04 and PCM connector C-111 in good condition?

YES : Go to Step 4.

NO : Repair or replace the connector. Refer to GROUP 00E, Harness Connector Inspection P.00E-2. The speedometer should work normally.

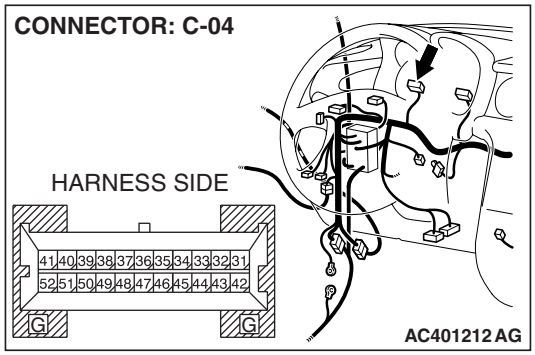

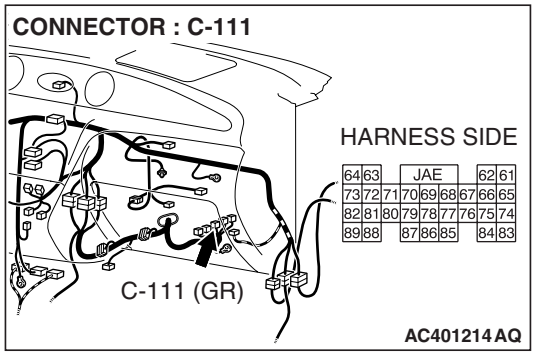

STEP 4. Check the wiring harness between combination meter connector C-04 (terminal 46) and PCM connector C-111 (terminal 79).

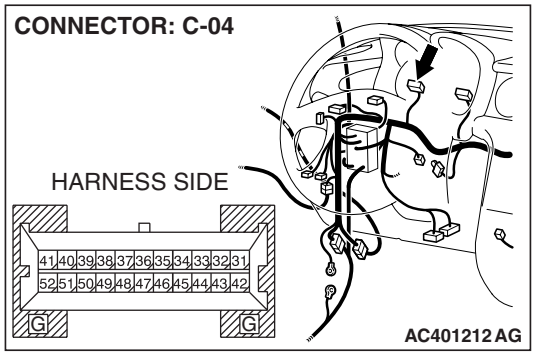

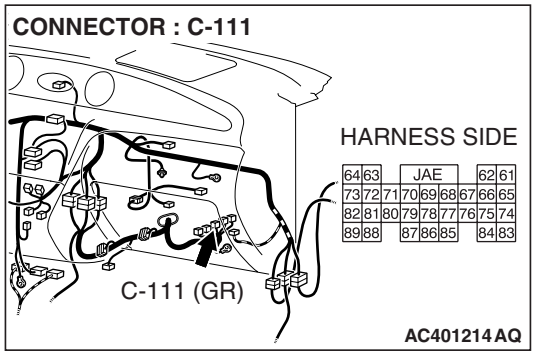

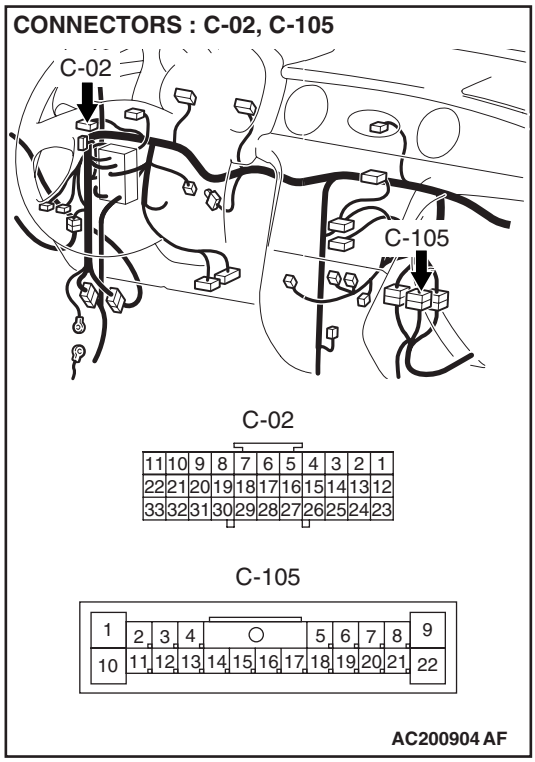

NOTE: Also check joint connector (3) C-02 and intermediate connector C-105. If joint connector (3) C-02 or intermediate connector C-105 are damaged, repair or replace the connector as described in GROUP 00E, Harness Connector Inspection *P.00E-2*.

Q: Are the wiring harness between combination meter connector C-04 (terminal 46) and PCM connector C-111 (terminal 79) in good condition?

YES : Go to Step 5.

NO : Repair the wiring harness. The speedometer should work normally.

STEP 5. Check in auto-cruise control.

Q: Does auto-cruise control take effect?

YES : Replace the combination meter. The speedometer should work normally.

NO : Replace the PCM. The speedometer should work normally.

INSPECTION PROCEDURE 1: Speedometer does not Work. <M/T>

Speedmeter Circuit <M/T>

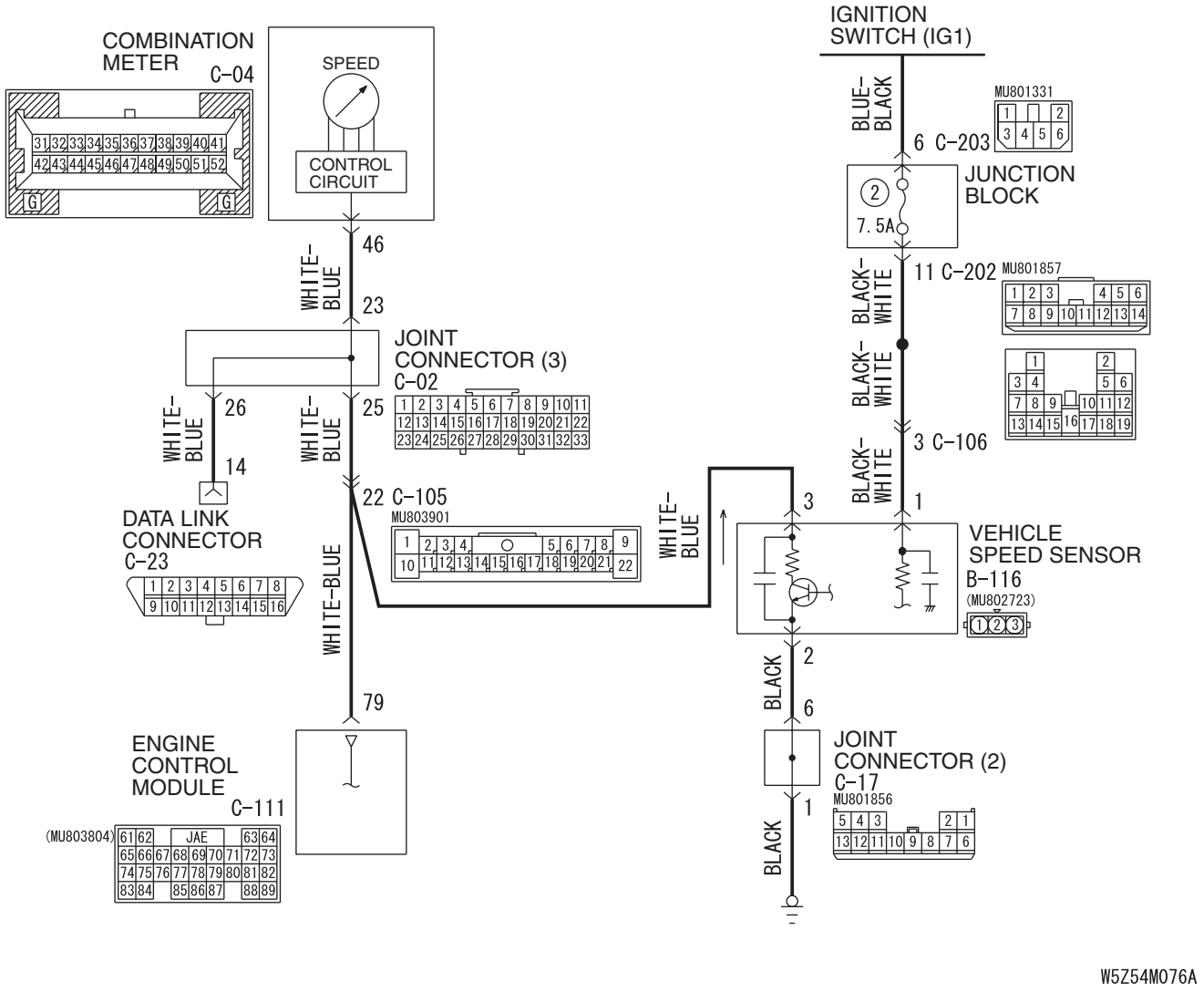

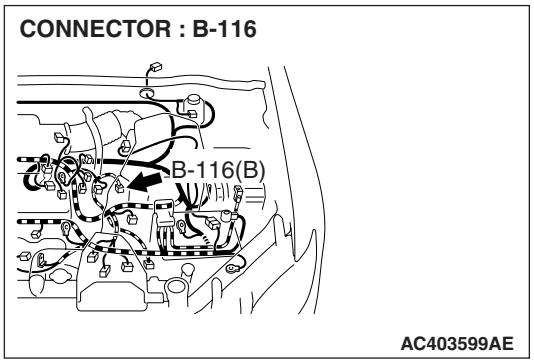

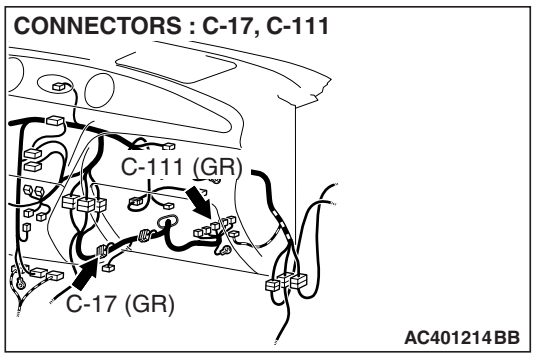

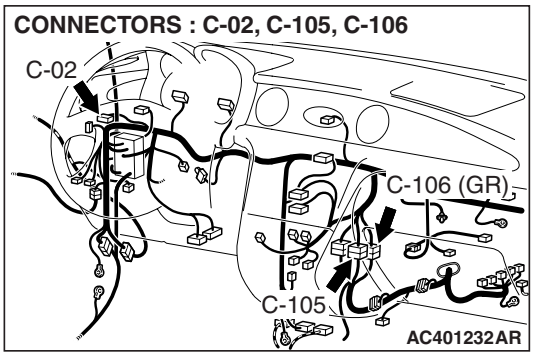

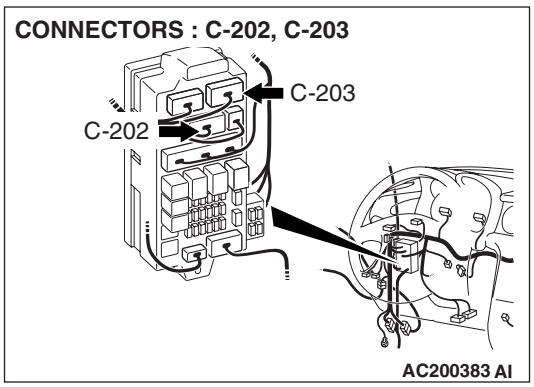

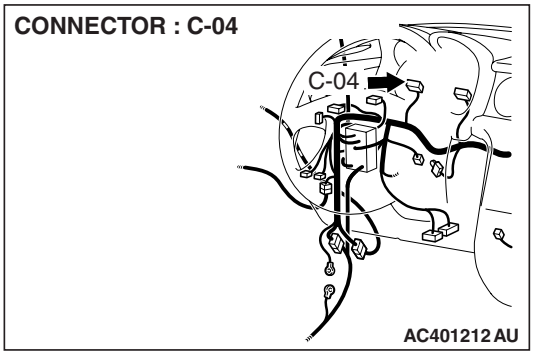

CIRCUIT OPERATION

- The ignition switch (IG1) circuit is the power source for the speedometer and vehicle speed sensor.
- The vehicle speed sensor is incorporated in the transaxle. The signals from the vehicle speed sensor are referenced for ECM to send a vehicle speed signal to the speedometer. The speedometer calculates the vehicle speed signal to operate the needle of the meter. At the same time, the travel distance is calculated.

TECHNICAL DESCRIPTION (COMMENT)

The cause may be due to malfunction of the vehicle speed sensor circuitry, ECM or speedometer. The vehicle speed sensor is also used by the engine control module (ECM).

TROUBLESHOOTING HINTS

- Malfunction of the vehicle speed sensor
- Malfunction of the combination meter (printed-circuit board or speedometer and tachometer)
- Malfunction of the ECM
- Damaged wiring harness or connectors

DIAGNOSIS

Required Special Tools:

- MB991223: Harness Set
- MB991958: Scan Tool (MUT-III Sub Assembly)
  - MB991824: Vehicle Communication Interface (V.C.I.)
  - MB991827: MUT-III USB Cable
  - MB991910: MUT-III Main Harness A

STEP 1. Check with other meter.

Check to see that the tachometer, fuel gauge and water thermometer are operating normally.

Q: Do all other meters operate?

YES <other meters all operate.> : Go to Step 2.

NO <one of the meters do not operate.> : Refer to INSPECTION PROCEDURE 5 P.54A-79.

STEP 2. Using scan tool MB991958, read the MFI system diagnostic trouble code.

⚠ CAUTION

To prevent damage to scan tool always turn the ignition switch to "LOCK" (OFF) position before connecting or disconnecting scan tool MB991958.

(1) Connect scan tool MB991958 to the data link connector.
(2) Turn the ignition switch to the "ON" position.
(3) Read the MFI system diagnostic trouble code.

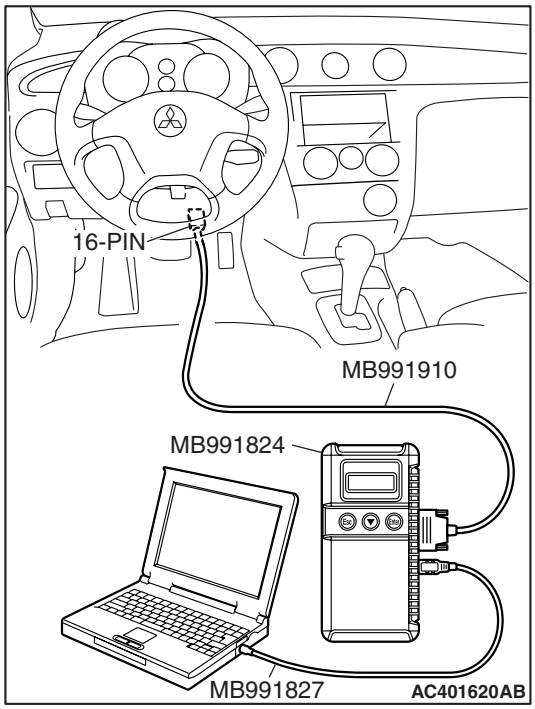

Q: Is DTC P0500 output?

YES : Refer to GROUP 13A, Multiport Fuel Injection (MFI) Diagnosis.P.13A-40

NO : Go to Step 3.

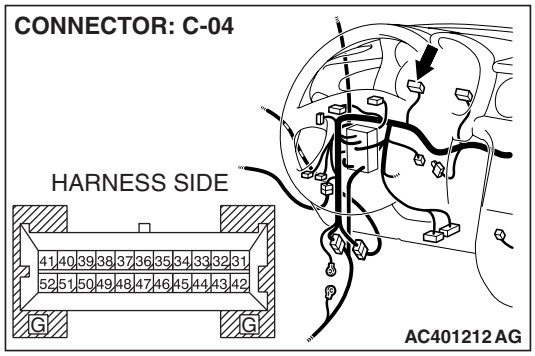

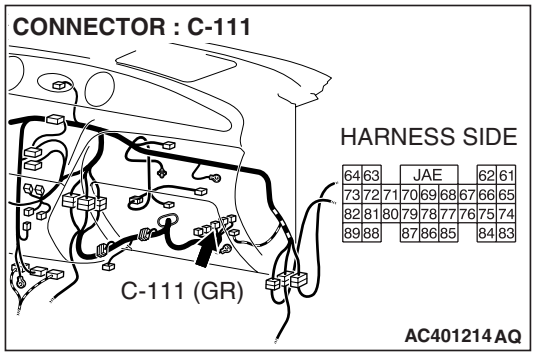

STEP 3. Check combination meter connector C-04 and ECM connector C-111 for damage.

Q: Are combination meter connector C-04 and ECM connector C-111 in good condition?

YES : Go to Step 4.

NO : Repair or replace the connector. Refer to GROUP 00E, Harness Connector Inspection P.00E-2. The speedometer should work normally.

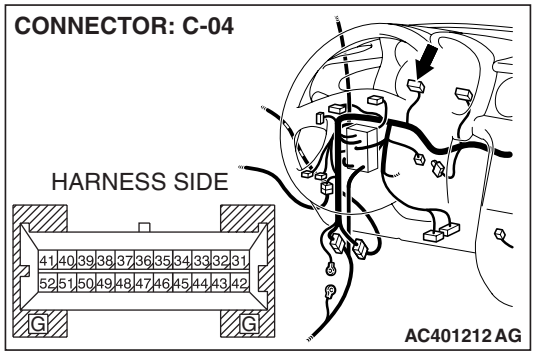

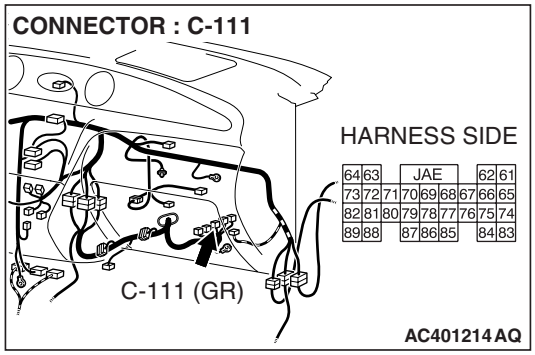

STEP 4. Check the wiring harness between combination meter connector C-04 (terminal 46) and ECM connector C-111 (terminal 79).

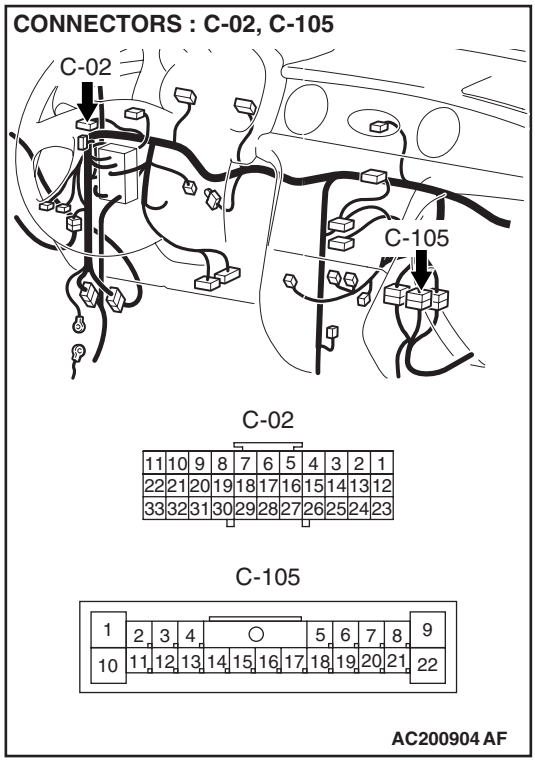

NOTE: Also check joint connector (3) C-02 and intermediate connector C-105. If joint connector (3) C-02 or intermediate connector C-105 are damaged, repair or replace the connector as described in GROUP 00E, Harness Connector Inspection P.00E-2.

Q: Are the wiring harness between combination meter connector C-04 (terminal 46) and ECM connector C-111 (terminal 79) in good condition?

YES : Go to Step 5.

NO : Repair the wiring harness. The speedometer should work normally.

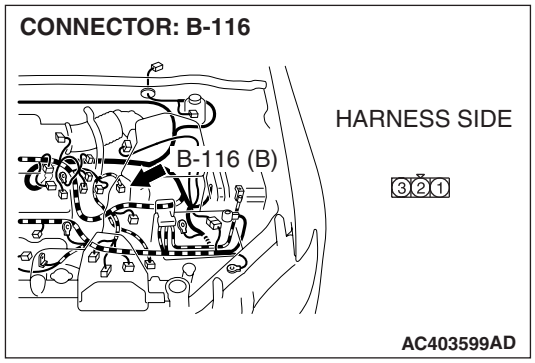

STEP 5. Check vehicle speed sensor connector B-116 for damage.

Q: Is vehicle speed sensor connector B-116 in good condition?

YES : Go to Step 6.

NO : Repair or replace the connector. Refer to GROUP 00E, Harness Connector Inspection P.00E-2. The speedometer should work normally.

STEP 6. Check the ignition switch (IG1) circuit to the vehicle speed sensor. Measure the voltage at vehicle speed sensor connector B-116.

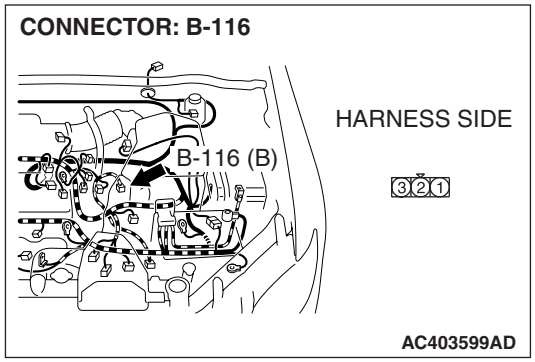

(1) Disconnect vehicle speed sensor connector B-116 and measure the voltage available at the harness side of the connector.
(2) Turn the ignition switch to "ON" position.

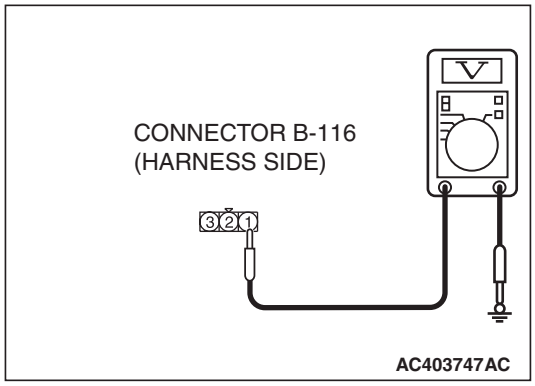

(3) Measure the voltage between terminal 1 and ground.
The voltage should equal approximately 12 volts (battery positive voltage).

Q: Is the measured voltage approximately 12 volts (battery positive voltage)?

YES : Replace the vehicle speed sensor. The speedometer should work now normally.

NO : Go to Step 7.

STEP 7. Check the wiring harness between vehicle speed sensor connector B-116 (terminal 1) and the ignition switch (IG1).

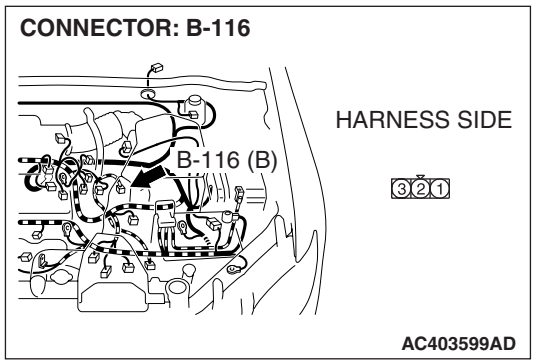

CONNECTOR : C-106

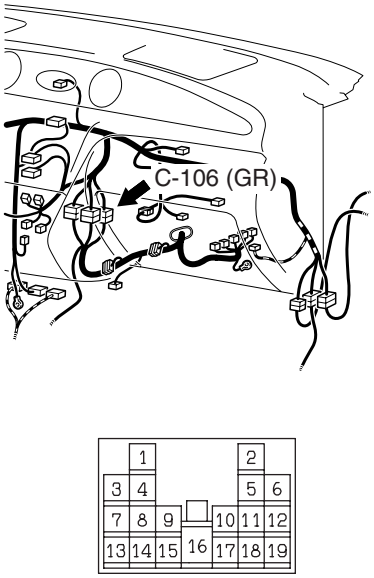

AC401215AC

NOTE: Also check junction block connector C-202, C-203 and intermediate connector C-106. If junction block connector C-202, C-203 or intermediate connector C-106 are damaged, repair or replace the connector as described in GROUP 00E, Harness Connector Inspection P.00E-2.

Q: Are the wiring harness between vehicle speed sensor connector B-116 (terminal 1) and ignition switch (IG1) in good condition?

YES : Go to Step 8.

NO : Repair the wiring harness. The speedometer should work normally.

CONNECTORS : C-202, C-203

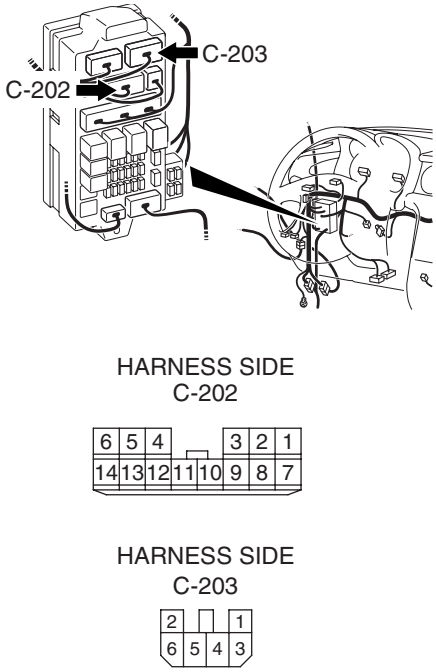

AC200394AC

STEP 8. Check the ground circuit to the vehicle speed sensor. Measure the resistance at vehicle speed sensor connector B-116.

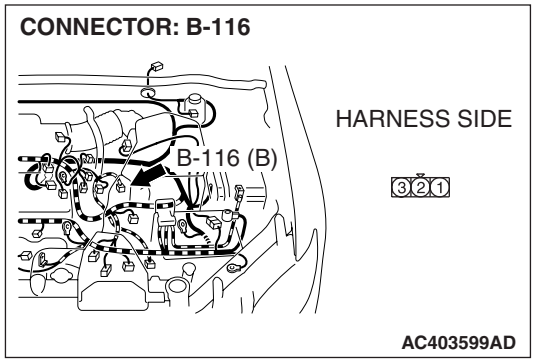

(1) Disconnect vehicle speed sensor connector B-116 and measure the resistance available at the harness side of the connector.

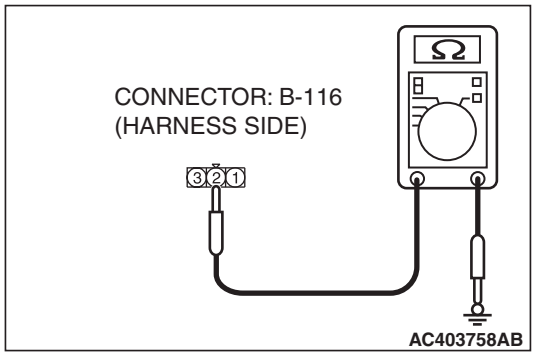

(2) Measure the resistance value between terminal 2 and ground.
The resistance should equal 2 ohms or less.

Q: Is the measured resistance 2 ohms or less?

YES : Go to Step 10.
NO : Go to Step 9.

STEP 9. Check the wiring harness between vehicle speed sensor connector B-116 (terminal 2) and ground.

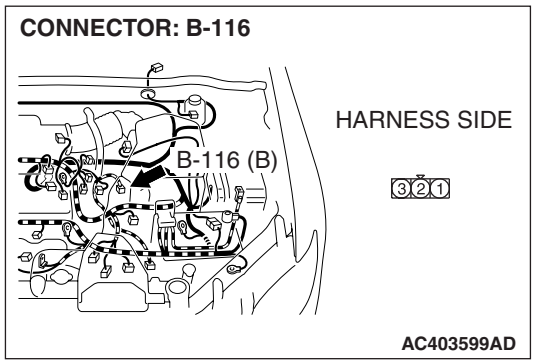

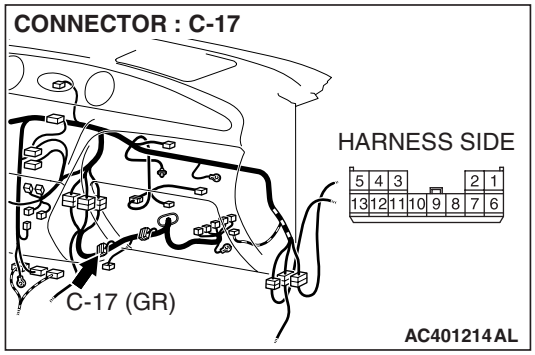

NOTE: Also check joint connector (2) C-17 for loose, corroded or damaged terminals, or terminals pushed back in the connectors. If joint connector (2) C-17 is damaged, repair or replace the damaged component(s) as described in GROUP 00E, Harness Connector Inspection P.00E-2.

Q: Is the wiring harness between vehicle speed sensor connector B-116 (terminal 2) and ground in good condition?

YES : No action is necessary and testing is complete.
NO : The wiring harness may be damaged or the connector(s) may have loose, corroded or damaged terminals, or terminals pushed back in the connector. Repair the wiring harness as necessary. The speedometer should work now normally.

STEP 10. Check the wiring harness between vehicle speed sensor connector B-116 (terminal 3) and ECM connector C-111 (terminal 79).

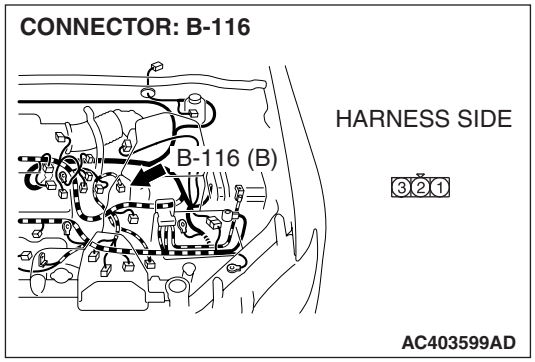

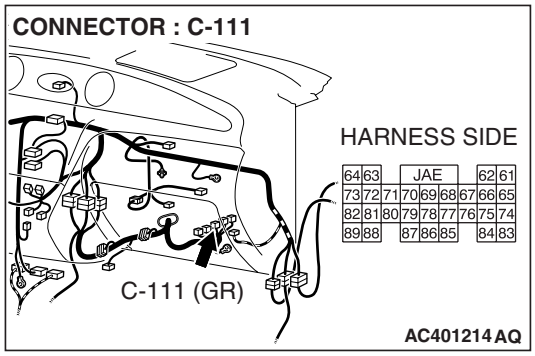

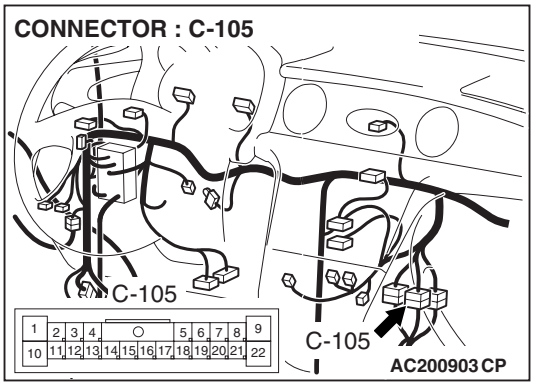

NOTE: Also check intermediate connector C-105 for loose, corroded or damaged terminals, or terminals pushed back in the connectors. If intermediate connector C-105 is damaged, repair or replace the damaged component(s) as described in GROUP 00E, Harness Connector Inspection P.00E-2.

Q: Is the wiring harness between vehicle speed sensor connector B-116 (terminal 3) and ECM connector C-111 (terminal 79) in good condition?

YES : Replace the combination meter. The speedometer should work now normally.

NO : The wiring harness may be damaged or the connector(s) may have loose, corroded or damaged terminals, or terminals pushed back in the connector. Repair the wiring harness as necessary. The speedometer should work now normally.

INSPECTION PROCEDURE 2: Tachometer does not Work.

Tachometer Circuit

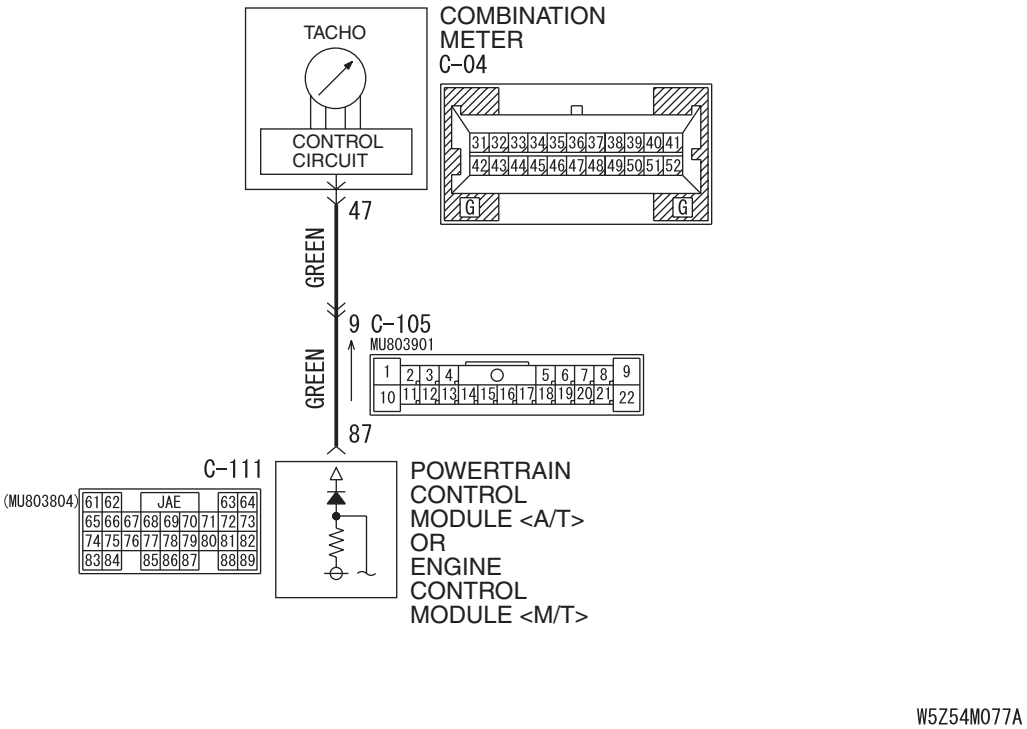

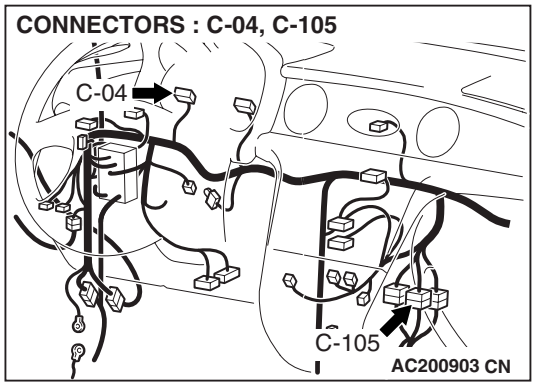

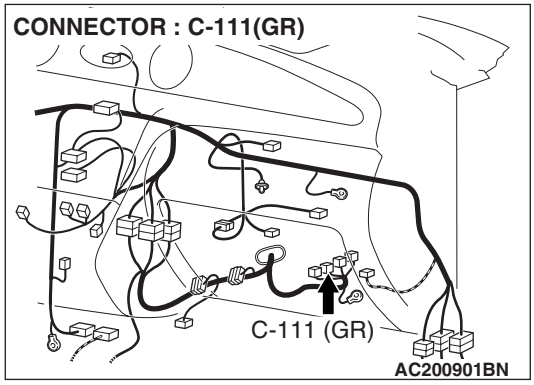

CIRCUIT OPERATION

- The tachometer power is supplied from the ignition switch (IG) circuit.
- The tachometer calculates the engine revolution (r/min) according to the PCM <A/T> or the ECM <M/T> signals to operate the needle.

TECHNICAL DESCRIPTION (COMMENT)

The cause is thought to be because PCM <A/T> or ECM <M/T> signals are not transmitted or due to combination meter error.

TROUBLESHOOTING HINTS

- Malfunction of the combination meter (printed circuit board or speedometer and tachometer)
- Malfunction of the PCM <A/T> or the ECM <M/T>
- Damaged wiring harness or connectors

DIAGNOSIS

Required Special Tools:

- MB991223: Harness Set
- MB991958: Scan Tool (MUT-III Sub Assembly)
  - MB991824: Vehicle Communication Interface (V.C.I.)
  - MB991827: MUT-III USB Cable
  - MB991910: MUT-III Main Harness A

STEP 1. Check with other meter.

Check to see that the speedometer, fuel gauge and water thermometer operate normally.

Q: Do all other meters operate?

YES <other meters all operate.> : Go to Step 2.

NO <one of the meters do not operate.> : Refer to INSPECTION PROCEDURE 5 P.54A-79.

STEP 2. Using scan tool MB991958, read the diagnostic trouble code.

⚠ CAUTION

To prevent damage to scan tool MB991958, always turn the ignition switch to "LOCK" (OFF) position before connecting or disconnecting scan tool MB991958.

(1) Connect scan tool MB991958 to the data link connector.
(2) Turn the ignition switch to "ON" position.
(3) Read the MFI system diagnostic trouble code.

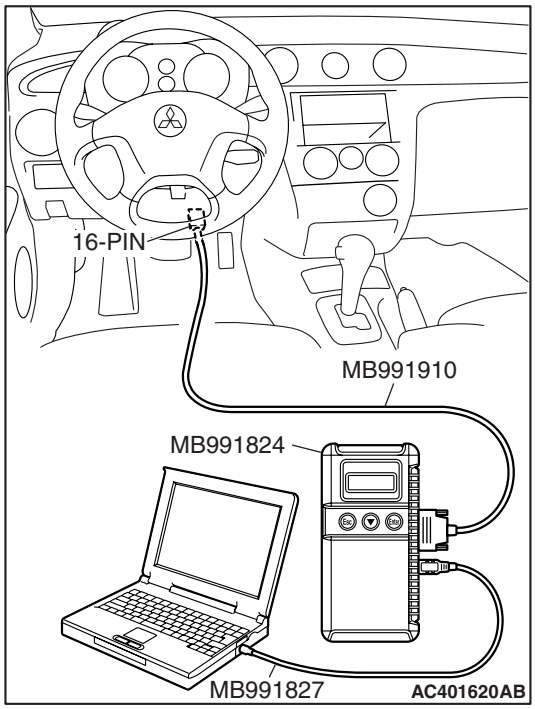

Q: Is DTC output to the MFI system?

YES : Refer to Group 13A, Multiport Fuel Injection (MFI) Diagnosis.P.13A-40

NO : Go to Step 3.

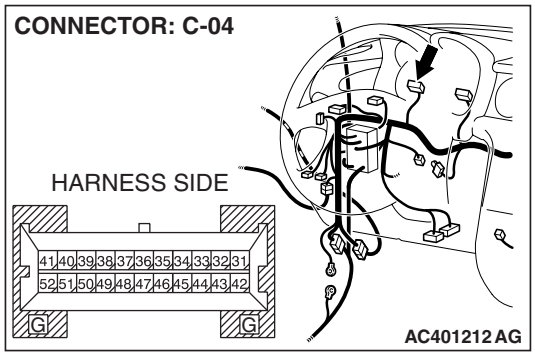

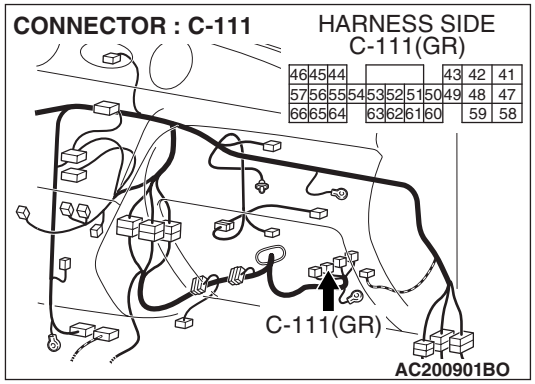

STEP 3. Check combination meter connector C-04 and PCM <A/T> or ECM <M/T> connector C-111 for damage.

Q: Are combination meter connector C-04 and PCM <A/T> or ECM <M/T> connector C-111 in good condition?

YES : Go to Step 4.

NO : Repair or replace the connector. Refer to GROUP 00E, Harness Connector Inspection P.00E-2. The tachometer should work normally.

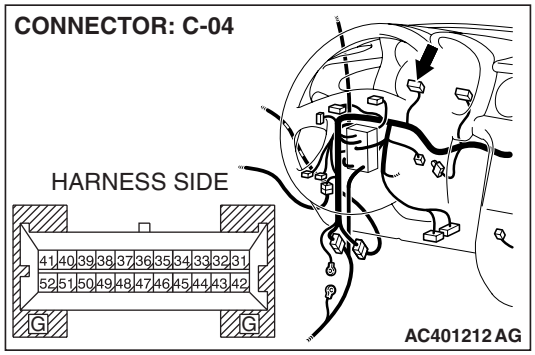

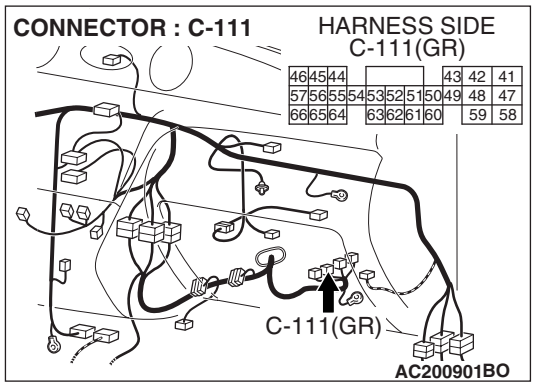

STEP 4. Check the wiring harness between combination meter connector C-04 (terminal 47) and PCM <A/T> or ECM <M/T> connector C-111 (terminal 87).

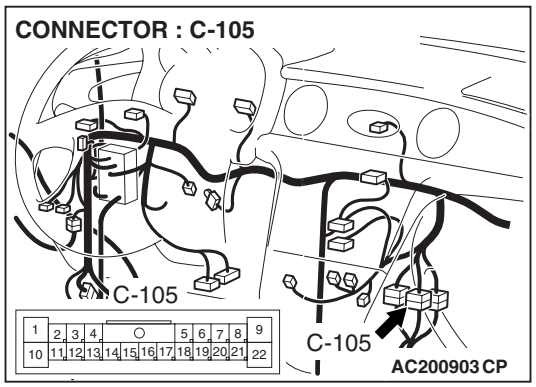

NOTE: Also check intermediate connector C-105. If intermediate connector C-105 is damaged, repair or replace the connector as described in GROUP 00E, Harness Connector Inspection P.00E-2.

Q: Are the wiring harness between combination meter connector C-04 (terminal 47) and PCM <A/T> ECM <M/T> connector C-111 (terminal 87) in good condition?

YES : Go to Step 5.

NO : Repair the wiring harness. The tachometer should work normally.

STEP 5. Replace the combination meter and check.

Q: Does the tachometer operate?

YES : There is no action to be taken.

NO : Replace the PCM <A/T> or ECM <M/T>. The tachometer should work normally.

INSPECTION PROCEDURE 3: Fuel Gauge does not Work.

Fuel Gauge Circuit

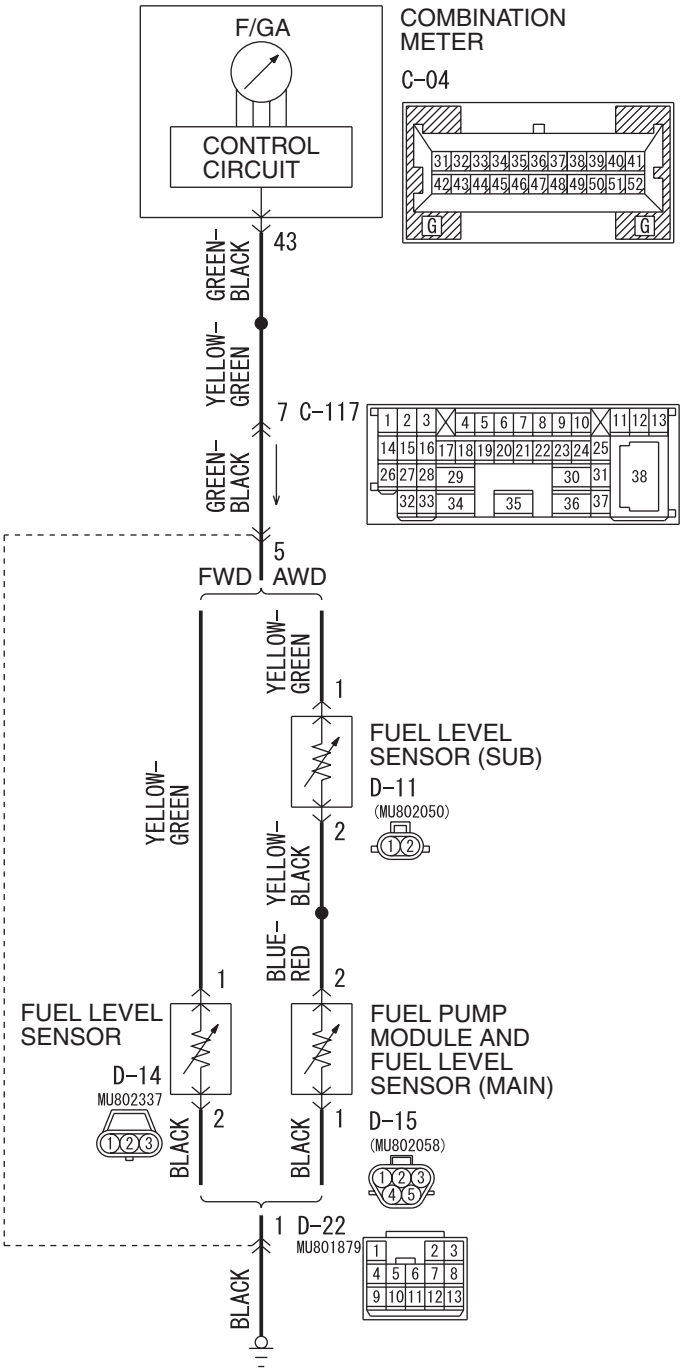

W5Z54M063A

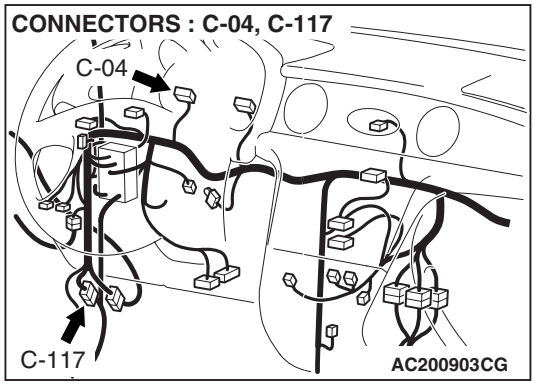

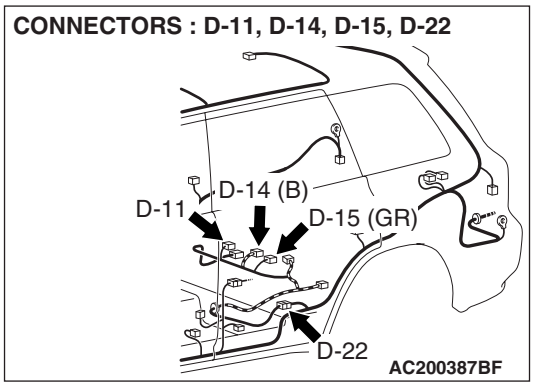

CIRCUIT OPERATION

- The ignition switch (IG1) circuit is the power source for the fuel gauge.
- The resistance value fluctuates causing the circuit current to fluctuate when the fuel level sensor the float moves up and down.
- The fuel gauge moves the needle by the circuit current.

TECHNICAL DESCRIPTION (COMMENT)

The cause is thought to be due to malfunction of the fuel level sensor, fuel pump and gauge unit or combination meter.

TROUBLESHOOTING HINTS

- Malfunction of the fuel pump module and fuel level sensor (main)
- Malfunction of the fuel level sensor
- Malfunction of the combination meter (printed-circuit board or fuel gauge assembly)

DIAGNOSIS

Required Special Tool:
MB991223: Harness Set

STEP 1. Check with other meter.
Check to see that the speedometer, fuel gauge and water thermometer operate normally.

Q: Do all other meters operate?

YES <other meters all operate.> : Go to Step 2.
NO <one of the meters do not operate.> : Refer to INSPECTION PROCEDURE 5 P.54A-79.

STEP 2. Check the malfunctioning vehicle.

Q: Is the malfunctioning vehicle a FWD?

YES <FWD> : Go to Step 3.
NO <AWD> : Go to Step 9.

STEP 3. Check the fuel level sensor.
Check to see if the fuel level sensor is normal. Refer to P.54A-88 <FWD> or P.54A-89 <AWD>.

Q: Is the fuel level sensor normal?

YES : Go to Step 4.
NO : Replace the fuel level sensor. The fuel gauge should work normally.

STEP 4. Measure at fuel level sensor connector D-14 in order to the ground circuit to the fuel level sensor.

(1) Disconnect fuel level sensor connector D-14, and measure at the wiring harness side.

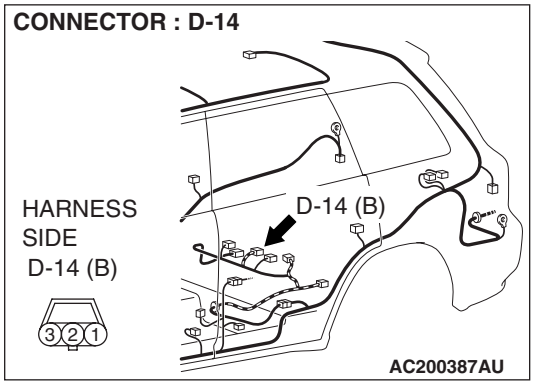

(2) Measure the resistance value between terminal 2 and ground.
- The measured value should be 2 ohm or less.

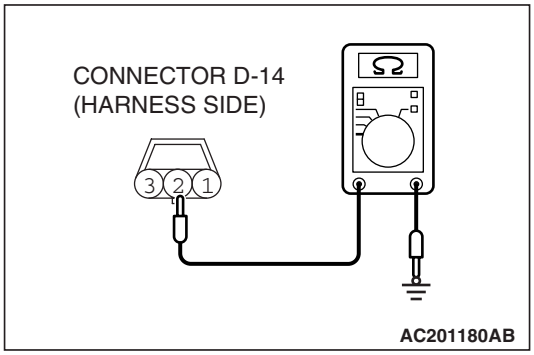

Q: Does the measured resistance value correspond with this range?

YES : Go to Step 7.

NO : Go to Step 5.

STEP 5. Check fuel level sensor connector D-14 for damage.

Q: Is fuel level sensor connector D-14 in good condition?

YES : Go to Step 6.

NO : Repair or replace the connector. Refer to GROUP 00E, Harness Connector Inspection P.00E-2. The fuel gauge should work normally.

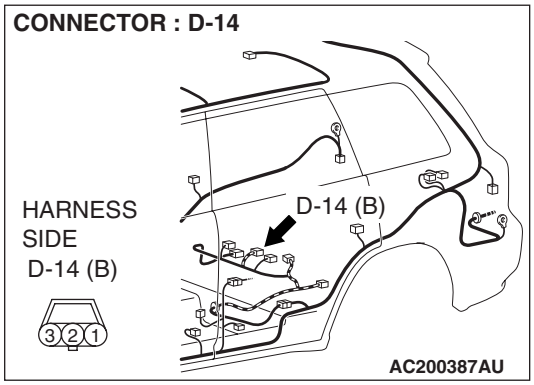

STEP 6. Check the wiring harness between fuel level sensor connector D-14 (terminal 2) and ground.

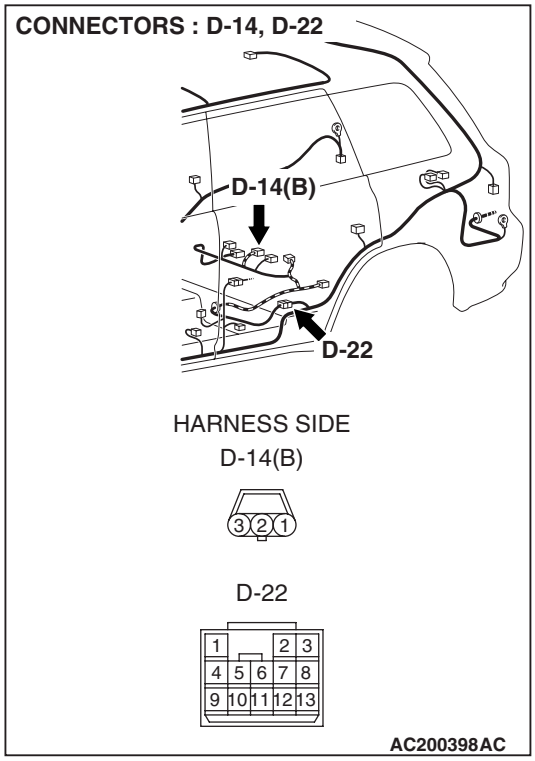

NOTE: Also check intermediate connector D-22. If intermediate connector D-22 is damaged, repair or replace the connector as described in GROUP 00E, Harness Connector Inspection *P.00E-2*.

Q: Is the wiring harness between fuel level sensor connector D-14 (terminal 2) and ground in good condition?

YES : There is no action to be taken.

NO : Repair the wiring harness. The fuel gauge should work normally.

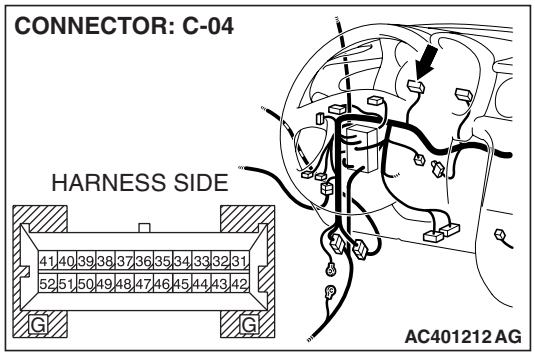

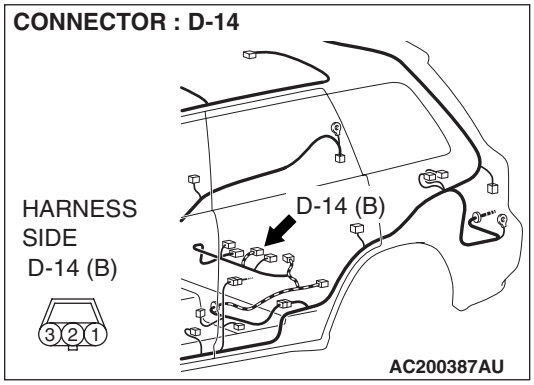

STEP 7. Check fuel level sensor connector D-14 and combination meter connector C-04 for damage.

Q: Are fuel level sensor connector D-14 and combination meter connector C-04 in good condition?

YES : Go to Step 8.

NO : Repair or replace the connector. Refer to GROUP 00E, Harness Connector Inspection P.00E-2. The fuel gauge should work normally.

STEP 8. Check the wiring harness between fuel level sensor connector D-14 (terminal 1) and combination meter connector C-04 (terminal 43).

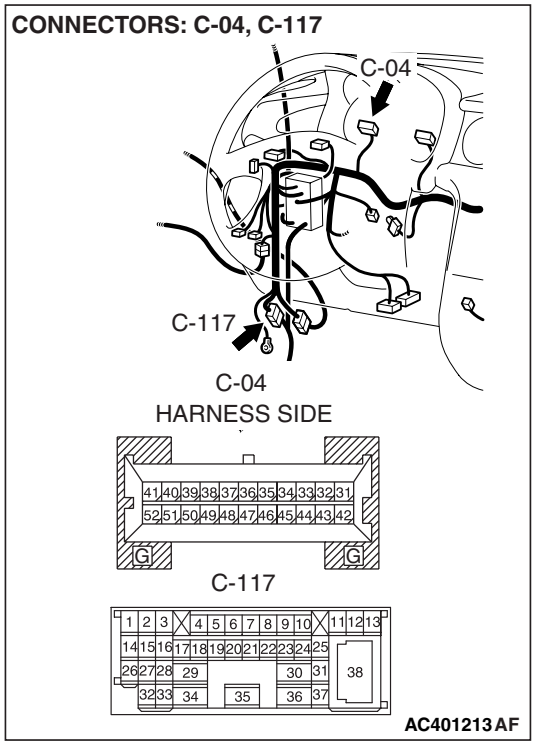

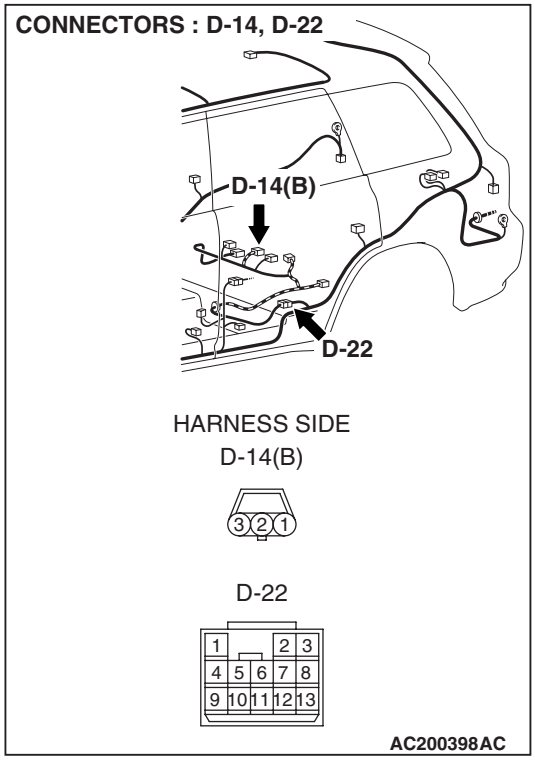

NOTE: Also check intermediate connectors C-117 and D-22. If intermediate connector C-117 or D-22 are damaged, repair or replace the connector as described in GROUP 00E, Harness Connector Inspection P.00E-2.

Q: Are the wiring harness between fuel level sensor connector D-14 (terminal 1) and combination meter connector C-04 (terminal 43) in good condition?

YES : Repair or replace the combination meter. The fuel gauge should work normally.

NO : Repair the wiring harness. The fuel gauge should work normally.

STEP 9. Check the fuel level sensor (sub) and fuel level sensor (main).

Check to see that the fuel level sensor (sub) and fuel level sensor (main) are normal. Refer to P.54A-88 <FWD> or P.54A-89 <AWD>.

Q: Are fuel level sensor (sub) and fuel level sensor (main) normal?

YES : Go to Step 10.

NO : Replace fuel level sensor (sub) and fuel level sensor (main). The fuel gauge should work normally.

STEP 10. Measure at fuel pump module and fuel level sensor connector D-15 in order to the ground circuit to the fuel pump and gauge unit.

(1) Disconnect fuel level sensor connector D-15, and measure at the wiring harness side.

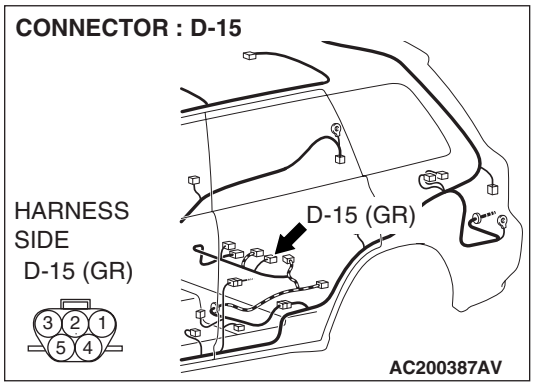

(2) Measure the resistance value between terminal 1 and ground.
- The measured value should be 2 ohms or less.

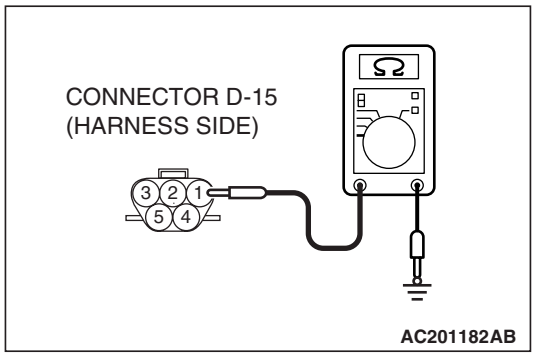

Q: Does the measured resistance value correspond with this range?

YES : Go to Step 13.

NO : Go to Step 11.

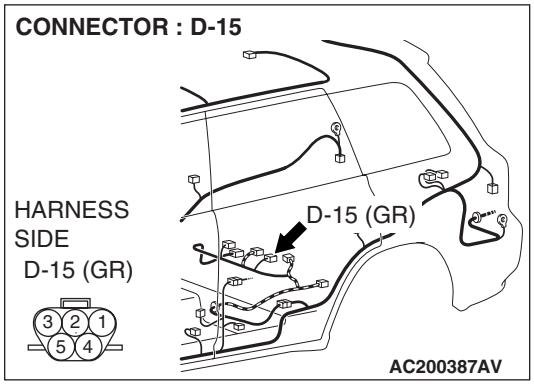

STEP 11. Check fuel pump module and fuel level sensor connector D-15 for damage.

Q: Is fuel pump module and fuel level sensor connector D-15 in good condition?

YES : Go to Step 12.

NO : Repair or replace the connector. Refer to GROUP 00E, Harness Connector Inspection P.00E-2. The fuel gauge should work normally.

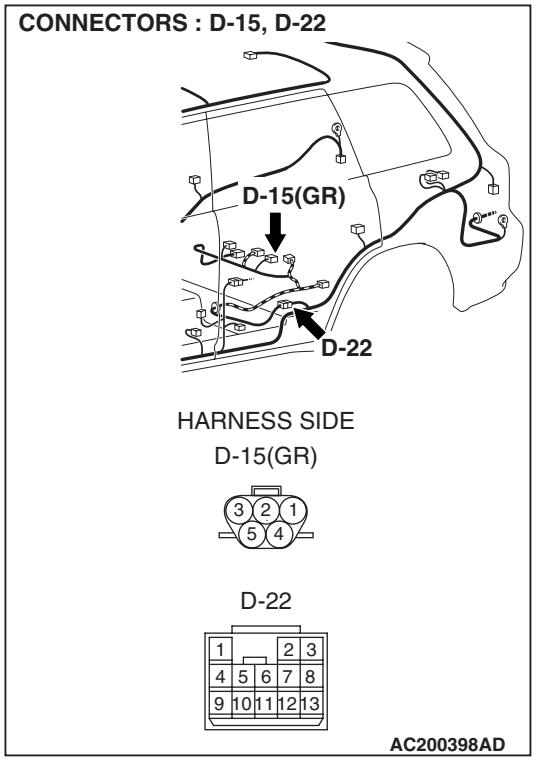

STEP 12. Check the wiring harness between fuel pump module and fuel level sensor connector D-15 (terminal 1) and ground.

NOTE: Also check intermediate connector D-22. If intermediate connector D-22 is damaged, repair or replace the connector as described in GROUP 00E, Harness Connector Inspection P.00E-2.

Q: Is the wiring harness between fuel pump module and fuel level sensor connector D-15 (terminal 1) and ground in good condition?

YES : There is no action to be taken.

NO : Repair the wiring harness. The fuel gauge should work normally.

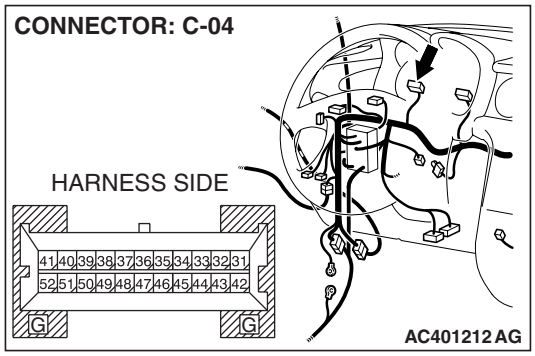

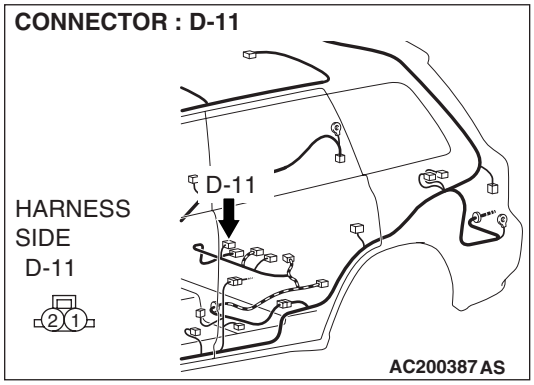

STEP 13. Check fuel level sensor connector D-11 and combination meter connector C-04 for damage.

Q: Are fuel level sensor connector D-11 and combination meter connector C-04 in good condition?

YES : Go to Step 14.

NO : Repair or replace the connector. Refer to GROUP 00E, Harness Connector Inspection P.00E-2. The fuel gauge should work normally.

STEP 14. Check the wiring harness between fuel level sensor connector D-11 (terminal 1) and combination meter connector C-04 (terminal 43).

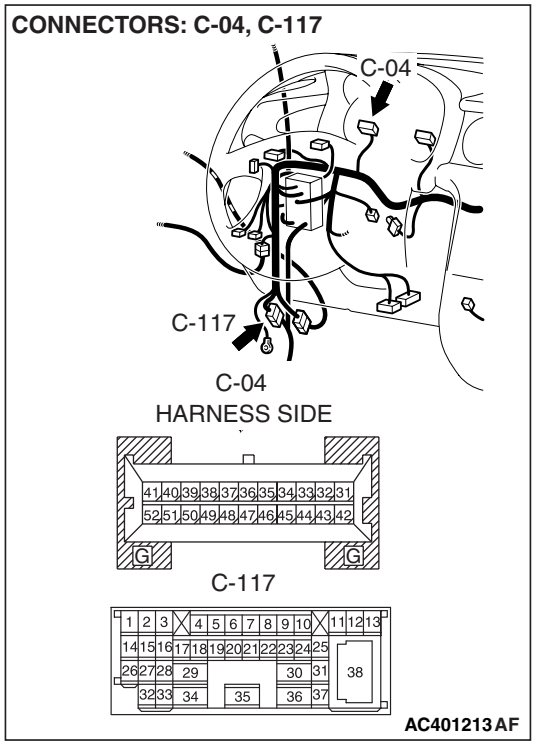

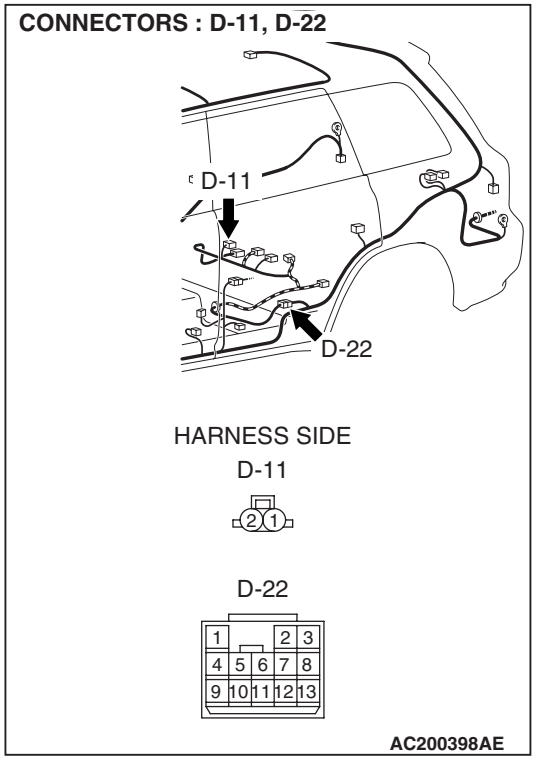

NOTE: Also check intermediate connectors C-117 and D-22. If intermediate connector C-117 or D-22 are damaged, repair or replace the connector as described in GROUP 00E, Harness Connector Inspection P.00E-2.

Q: Are the wiring harness between fuel level sensor connector D-11 (terminal 1) and combination meter connector C-04 (terminal 43) in good condition?

YES : Go to Step 15.

NO : Repair the wiring harness. The fuel gauge should work normally.

STEP 15. Check fuel level sensor connector D-11 and fuel pump and gauge unit connector D-15 for damage.

Q: Are fuel level sensor connector D-11 and fuel pump and gauge unit connector D-15 in good condition?

YES : Go to Step 16.

NO : Repair or replace the connector. Refer to GROUP 00E, Harness Connector Inspection P.00E-2. The fuel gauge should work normally.

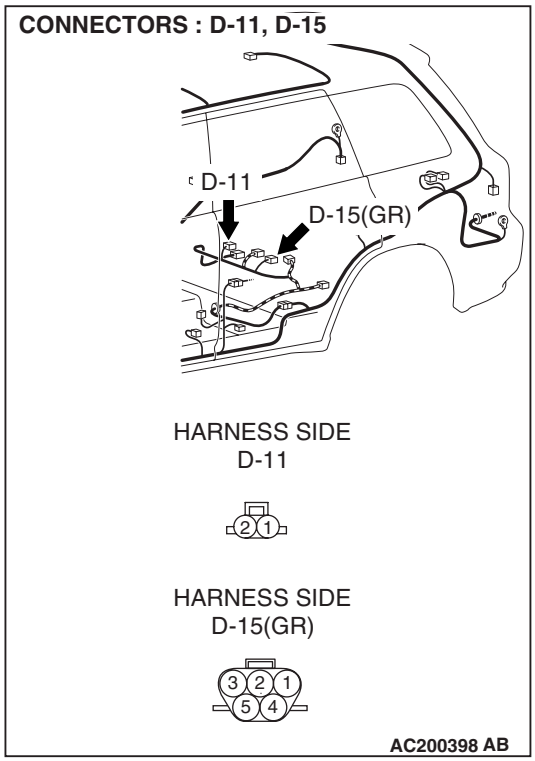

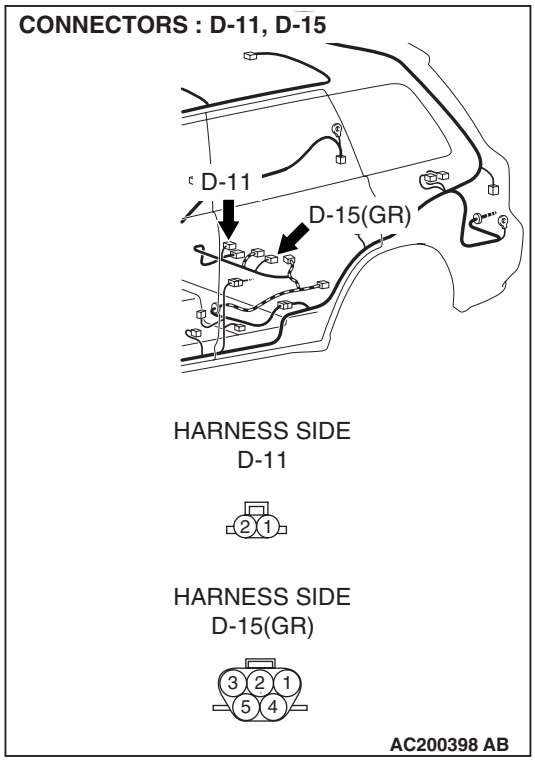

STEP 16. Check the wiring harness between fuel level sensor connector D-11 (terminal 2) and fuel pump module and fuel level sensor connector D-15 (terminal 2).

Q: Are the wiring harness between fuel level sensor connector D-11 (terminal 2) and fuel pump module and fuel level sensor connector D-15 (terminal 2) in good condition?

YES : Repair or replace the combination meter. The fuel gauge should work normally.

NO : Repair the wiring harness. The fuel gauge should work normally.

INSPECTION PROCEDURE 4: Engine Coolant Temperature Gauge does not Work.

Engine Coolant Temperature Gauge Circuit

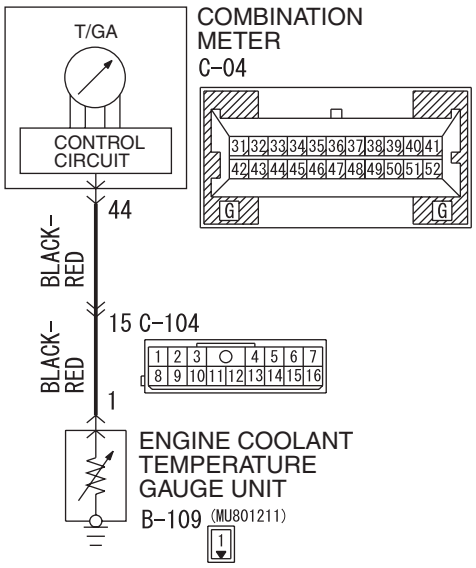

W5Z54M065A

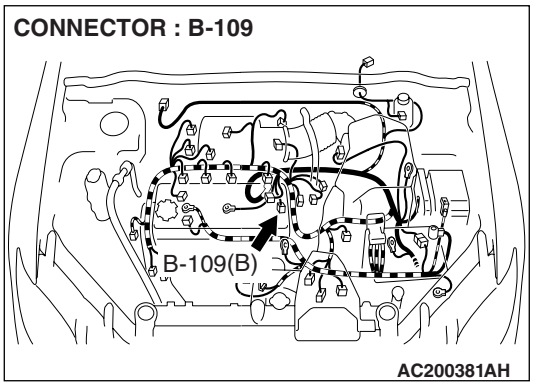

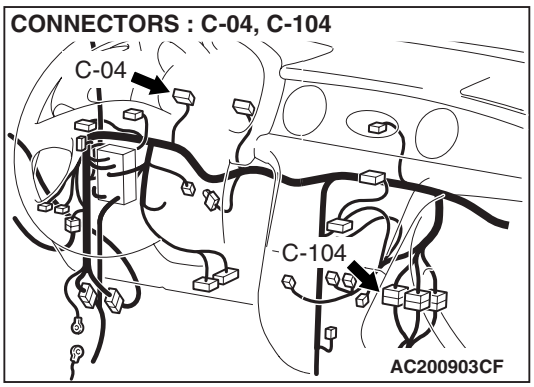

CIRCUIT OPERATION

- The ignition switch (IG1) circuit is the power source for the engine coolant temperature gauge.
- Resistance value, which the engine coolant temperature gauge unit sends to the combination meter, is dependent on temperature of the engine coolant. This causes circuit current to fluctuate.
- The engine coolant temperature gauge moves the needle according to the circuit current.

TECHNICAL DESCRIPTION (COMMENT)

The cause is thought to be due to malfunction of engine coolant temperature gauge unit or the combination meter.

TROUBLESHOOTING HINTS

- Malfunction of the engine coolant temperature gauge unit
- Malfunction of the combination meter
- Damaged wiring harness or connectors

DIAGNOSIS

Required Special Tool:
MB991223: Harness Set

STEP 1. Check with other meter.
Check to see that the speedometer, tachometer and engine coolant temperature gauge unit operate normally.

Q: Do all other meters operate?

YES <other meters all operate.> : Go to Step 2.
NO <one of the meters do not operate.> : Refer to INSPECTION PROCEDURE 5 P.54A-79.

STEP 2. Check the engine coolant temperature gauge unit.
Check to see that the engine coolant temperature gauge unit operate normally. Refer to P.54A-91.

Q: Is the engine coolant temperature gauge unit normal?

YES : Go to Step 3.
NO : Replace the engine coolant temperature gauge unit. The engine coolant temperature gauge unit should work normally.

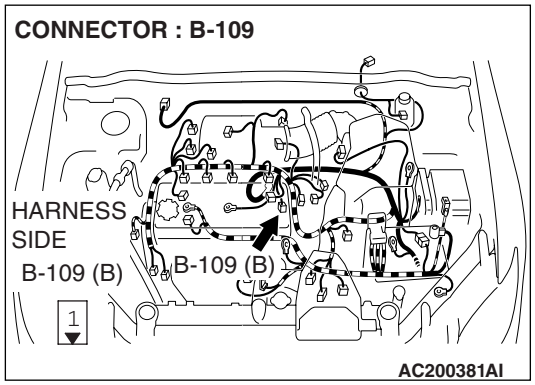

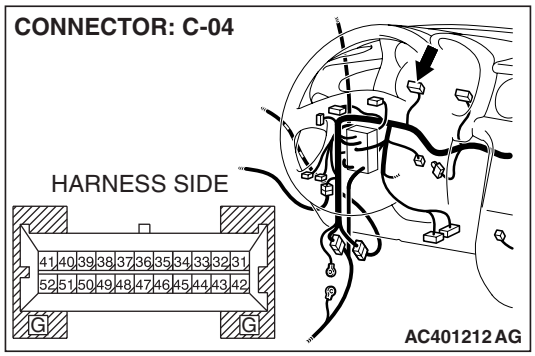

STEP 3. Check engine coolant temperature gauge unit connector B-109 and combination meter connector C-04 for damage.

Q: Are engine coolant temperature gauge unit connector B-109 and combination meter connector C-04 in good condition?

YES : Go to Step 4.

NO : Repair or replace the connector. Refer to GROUP 00E, Harness Connector Inspection P.00E-2. The engine coolant temperature gauge unit should work normally.

STEP 4. Check the wiring harness between engine coolant temperature gauge unit connector B-109 (terminal 1) and combination meter connector C-04 (terminal 44).

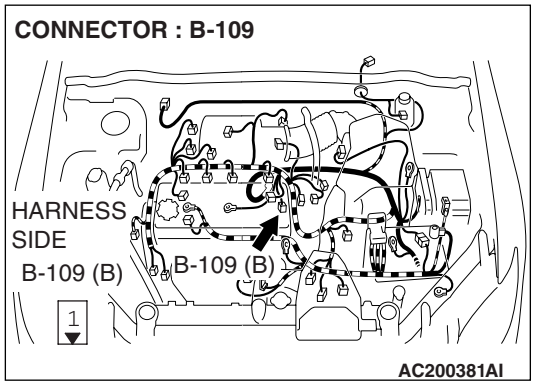

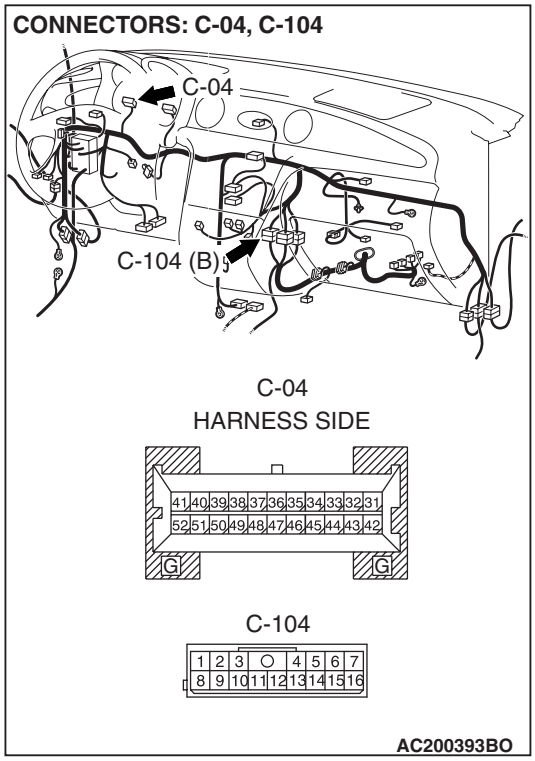

NOTE: Also check intermediate connector C-104. If intermediate connector C-104 is damaged, repair or replace the connector as described in GROUP 00E, Harness Connector Inspection P.00E-2.

Q: Are the wiring harness between engine coolant temperature gauge unit connector B-109 (terminal 1) and combination meter connector C-04 (terminal 44) in good condition?

YES : Repair or replace the combination meter. The engine coolant temperature gauge unit should work normally.

NO : Repair the wiring harness. The engine coolant temperature gauge unit should work normally.

INSPECTION PROCEDURE 5: Combination meter does not work.

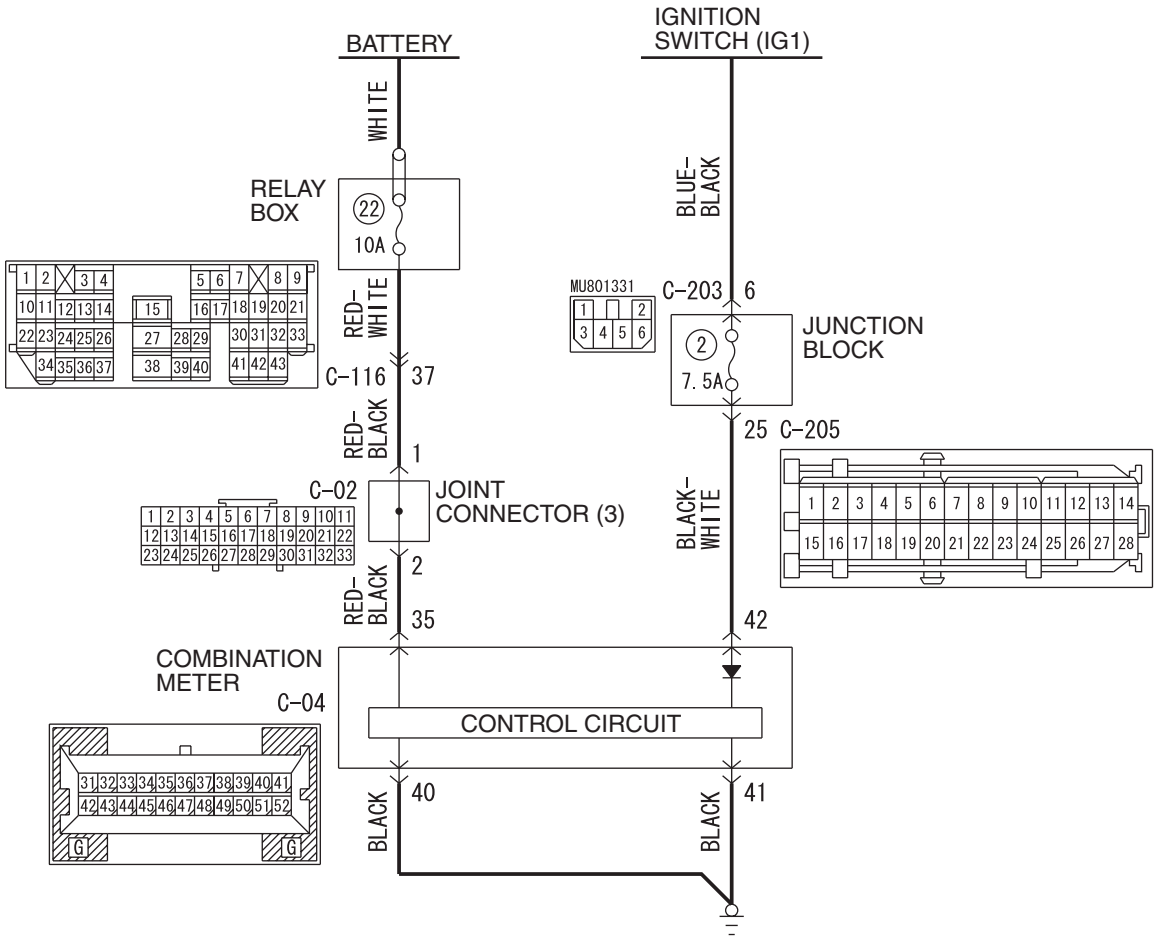

W5Z54M064A

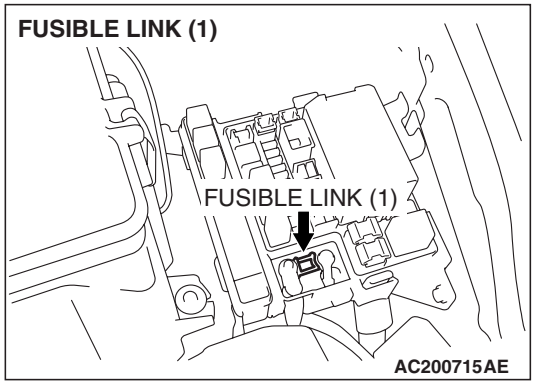

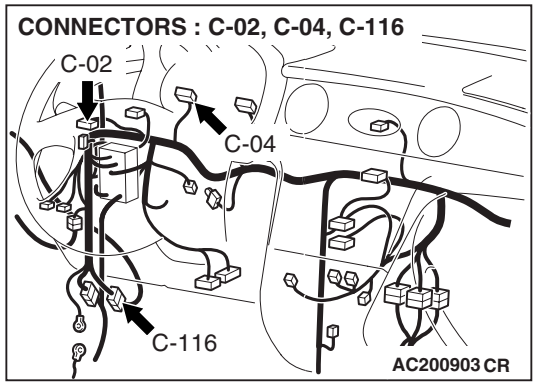

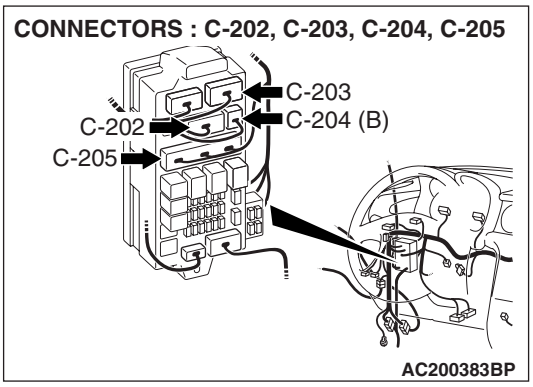

CIRCUIT OPERATION

The combination meter is powered by the ignition switch (IG1) and battery.

TECHNICAL DESCRIPTION (COMMENT)

The cause is thought to be malfunction of the power, ground circuitry or combination meter.

TROUBLESHOOTING HINTS

- Malfunction of the combination meter (printed-circuit board or speedometer and tachometer)
- Damaged wiring harness or connectors

DIAGNOSIS

Required Special Tool:

- MB991223: Harness Set

STEP 1. Measure at combination meter connector C-04 by backprobing in order to check the battery circuit of power supply system to the combination meter.

(1) Measure at combination meter connector C-04 without disconnecting the connector.

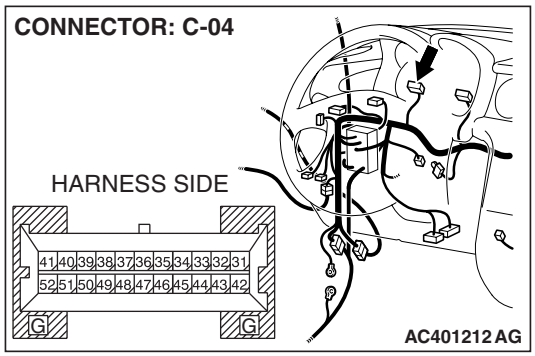

(2) Measure the voltage between terminal 35 and ground.
   - The measured value should be approximately 12 volts (battery positive voltage).

Q: Does the measured voltage correspond with this range?

YES : Go to Step 4.
NO : Go to Step 2.

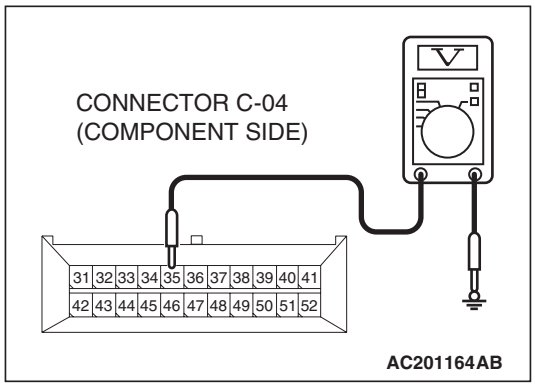

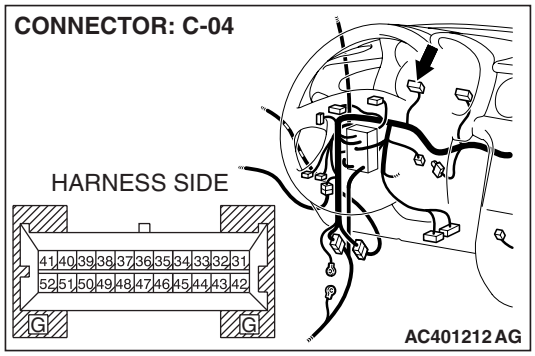

STEP 2. Check combination meter connector C-04 for damage.

Q: Is combination meter connector C-04 in good condition?

YES : Go to Step 3.

NO : Repair or replace the connector. Refer to GROUP 00E, Harness Connector Inspection P.00E-2. Check to see that all meters operate.

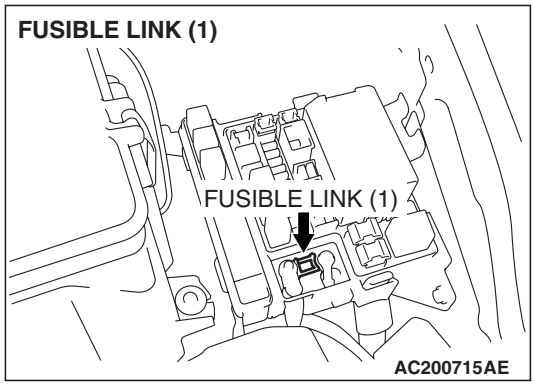

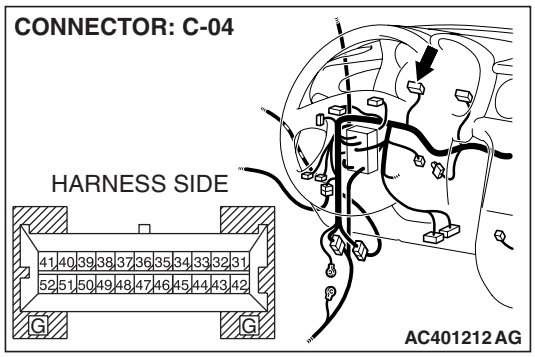

STEP 3. Check the wiring harness between combination meter connector C-04 (terminal 35) and battery.

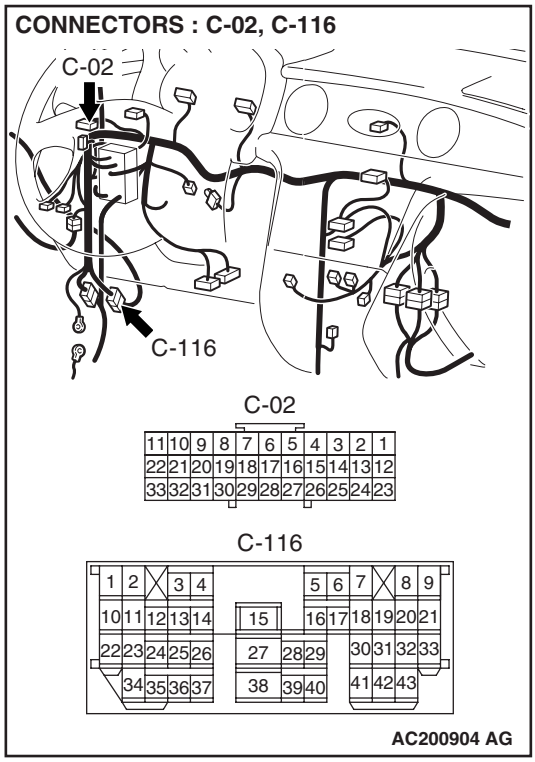

NOTE: Also check intermediate connector C-116 and joint connector (3) C-02. If intermediate connectors C-116 or joint connector (3) C-02 are damaged, repair or replace the connector as described in GROUP 00E, Harness Connector Inspection P.00E-2.

Q: Are the wiring harness between combination meter connector C-04 (terminal 35) and battery in good condition?

YES : There is no action to be taken.

NO : Repair the wiring harness. Check to see that all meters operate.

STEP 4. Measure at combination meter connector C-04 by backprobing in order to check the battery circuit of power supply system to the combination meter.

(1) Measure at combination meter connector C-04 without disconnecting the connector.

(2) Turn the ignition switch to "ON" position.

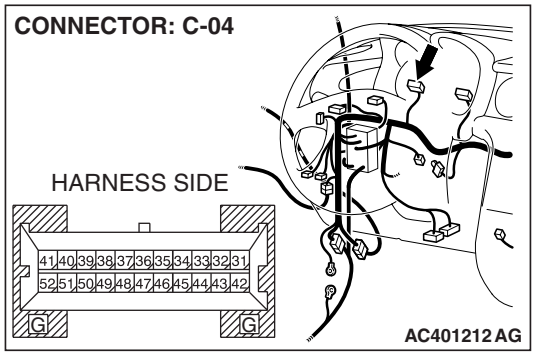

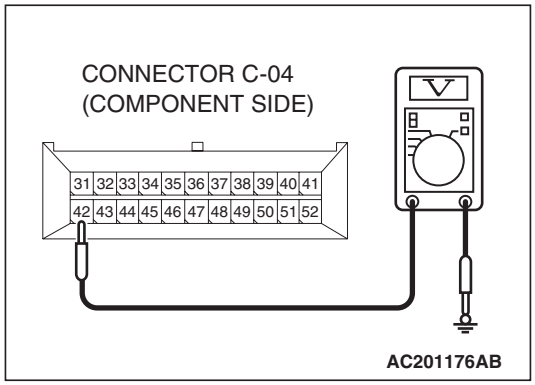

(3) Measure the voltage between terminal 42 and ground.
- The measured value should be approximately 12 volts (battery positive voltage).

Q: Does the measured voltage correspond with this range?

YES : Go to Step 7.

NO : Go to Step 5.

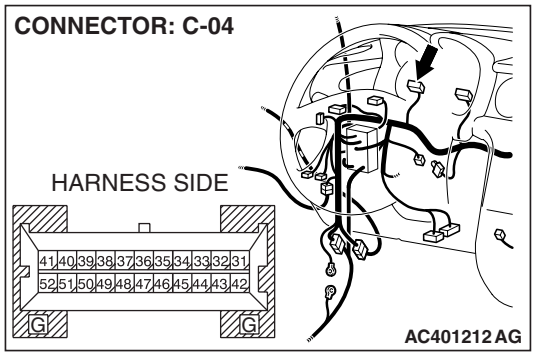

STEP 5. Check combination meter connector C-04 for damage.

Q: Is combination meter connector C-04 in good condition?

YES : Go to Step 6.

NO : Repair or replace the connector. Refer to GROUP 00E, Harness Connector Inspection P.00E-2. Check to see that all meters operate.

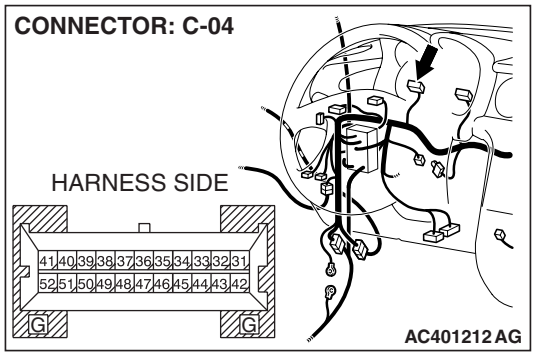

STEP 6. Check the wiring harness between combination meter connector C-04 (terminal 42) and ignition switch (IG1).

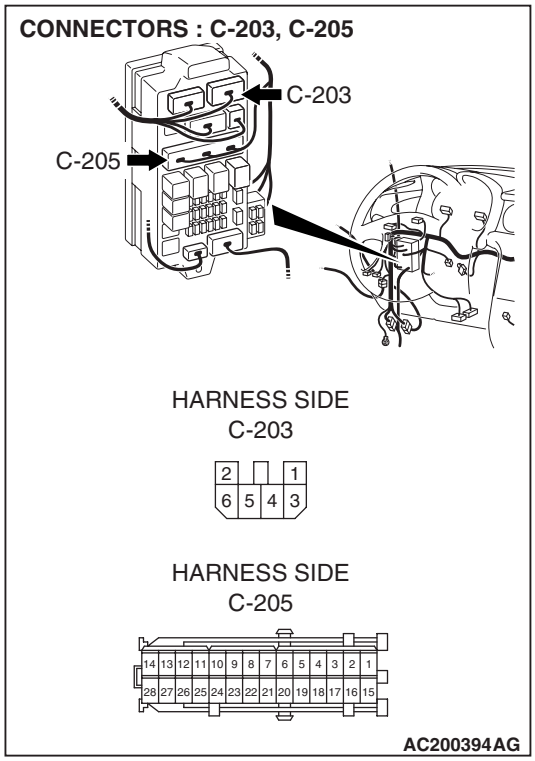

NOTE: Also check junction block connectors C-203 and C-205. If junction block connectors C-203 or C-205 are damaged, repair or replace the connector as described in GROUP 00E, Harness Connector Inspection P.00E-2.

Q: Are the wiring harness between combination meter connector C-04 (terminal 42) and ignition switch (IG1) in good condition?

YES : There is no action to be taken.

NO : Repair the wiring harness. Check to see that all meters operate.

STEP 7. Measure at combination meter connector C-04 by backprobing in order to check the ground circuit to the combination meter.

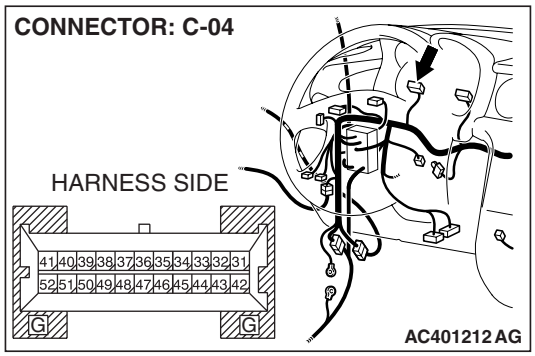

(1) Measure at combination meter connector C-04 without disconnecting the connector.

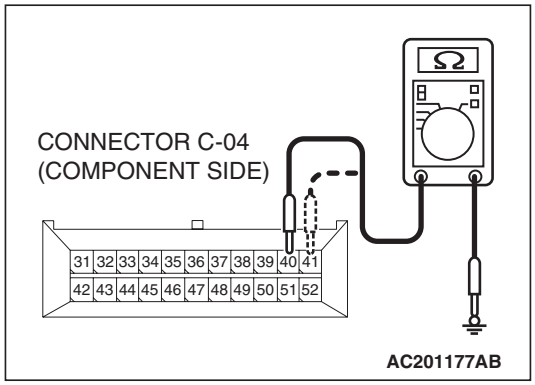

(2) Measure the resistance between terminal 40 and ground.
- The measured value should be 2 ohms or less.

(3) Measure the resistance between terminal 41 and ground.
- The measured value should be 2 ohms or less.

Q: Does the measured voltage correspond with this range?

YES : Repair the combination meter. Check to see that all meters operate.

NO : Go to Step 8.

STEP 8. Check combination meter connector C-04 for damage.

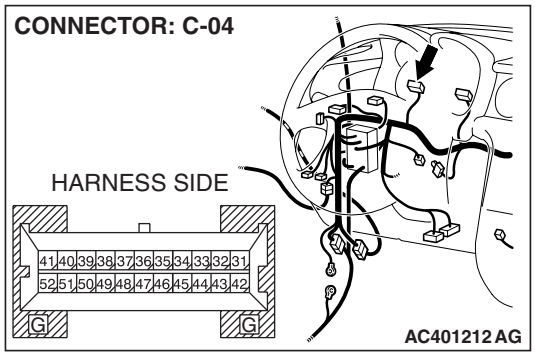

Q: Is combination meter connector C-04 in good condition?

YES : Go to Step 9.

NO : Repair or replace the connector. Refer to GROUP 00E, Harness Connector Inspection P.00E-2. Check to see that all meters operate.

STEP 9. Check the wiring harness between combination meter connector C-04 (terminal 40 and 41) and ground.

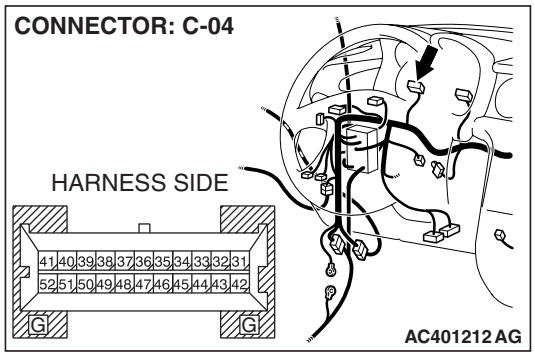

Q: Are the wiring harness between combination meter connector C-04 (terminal 40 and 41) and ground in good condition?

YES : There is no action to be taken.

NO : Repair the wiring harness. Check to see that all meters operate.

SPECIAL TOOLS

M1543000602406

TOOL	TOOL NUMBER AND NAME	SUPERSESSION	APPLICATION
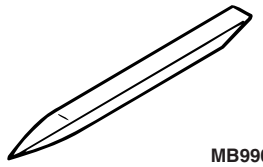 MB990784	MB990784 Ornament remover	General service tool	Removal of instrument panel garnish and meter bezel.
A 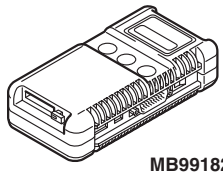 MB991824 B 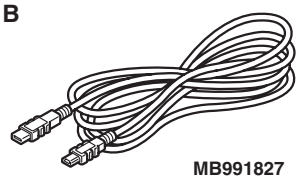 MB991827 C 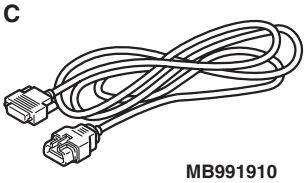 MB991910 D 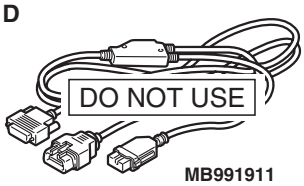 MB991911 E 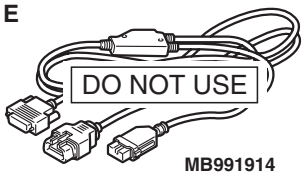 MB991914 F 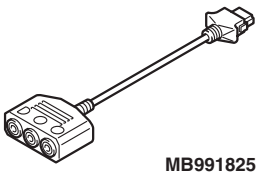 MB991825 G 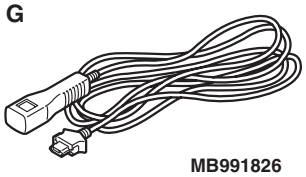 MB991826 MB991958	MB991958 A: MB991824 B: MB991827 C: MB991910 D: MB991911 E: MB991914 F: MB991825 G: MB991826 MUT-III Sub Assembly A: Vehicle Communication Interface B: MUT-III USB Cable C: MUT-III Main Harness A (Vehicles with CAN communication system) D: MUT-III Main Harness B (Vehicles without CAN communication system) E: MUT-III Main Harness C (for Daimler Chrysler models only) F: MUT-III Adapter Harness G: MUT-III Trigger Harness	MB991824-KIT *NOTE: G: MB991826 MUT-III Trigger Harness is not necessary when pushing V.C.I. ENTER key.*	Reading MFI system diagnostic trouble code **⚠ CAUTION** **For vehicles with CAN communication, use MUT-III main harness A to send simulated vehicle speed. If you connect MUT-III main harness B instead, the CAN communication does not function correctly.** *NOTE: This vehicle supports only the CAN communication between the SRS-ECU and the MUT-III.*

TOOL	TOOL NUMBER AND NAME	SUPERSESSION	APPLICATION
A B C D DO NOT USE MB991223AZ	MB991223 A: MB991219 B: MB991220 C: MB991221 D: MB991222 Harness set A: Test harness B: LED harness C: LED harness adapter D: Probe	General service tools	Making voltage and resistance measurements during troubleshooting A: Connect pin contact pressure inspection B: Power circuit inspection C: Power circuit inspection D: Commercial tester connection
MB992006	MB992006 Extra fine probe	General service tool	Making voltage and resistance measurement during troubleshooting

ON-VEHICLE SERVICE

SPEEDOMETER CHECK

M1543000900434

Adjust the pressure of tires to the specified level. (Refer to GROUP 31, On-vehicle Service P.31-7).

⚠ CAUTION

- **Do not operate the clutch suddenly. Do not increase/decrease speed rapidly while testing.**
- **Set a free-roller on the rear tire for AWD.**

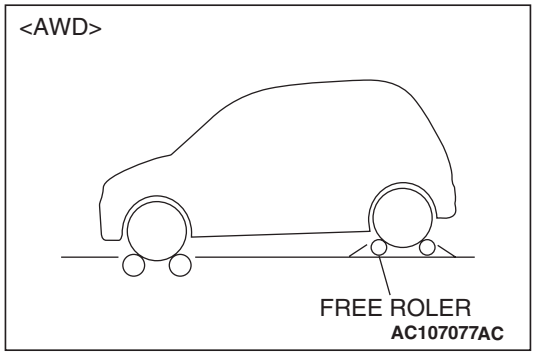

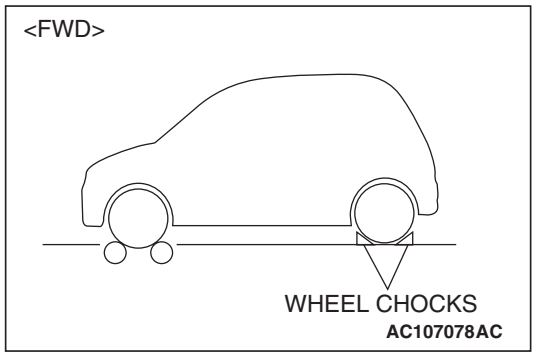

1. Set the vehicle onto a speedometer tester and use wheel chocks to hold the rear wheels.

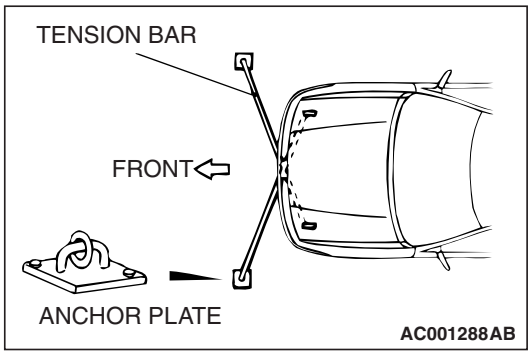

2. To prevent the front wheel from moving from side to side, attach tension bars to the tie-down hook, and secure both ends to anchor plates.
3. To prevent the vehicle from moving, attach a chain or wire to the rear retraction hook, and make sure the end of the chain or wire is secured.
4. Check if the speedometer indicator range is within the standard values.

   Standard value:

STANDARD INDICATION km/h (mph)	ALLOWANCE RANGE km/h (mph)
32 (20)	31 –35 (19 –22)
64 (40)	61 –71 (38 –44)
97 (60)	92 –106 (57 –66)
129 (80)	122 –142 (76 –88)
161 (100)	151 –177 (94 –110)

5. If not to the standard value, inspect for proper tire size. If not correct, replace the tires with original size tires and retest. If correct, replace the speedometer. If still not to standard value, replace the vehicle speed sensor.

TACHOMETER CHECK

M1543001000661

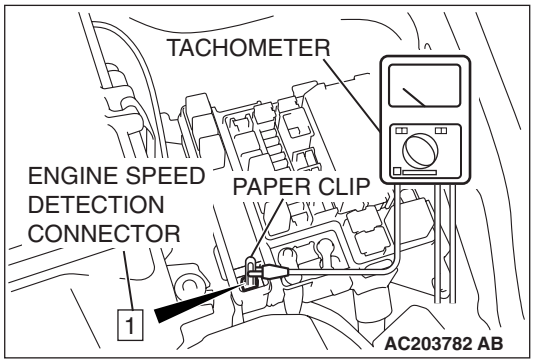

1. Attach an external high quality tachometer to the engine speed detection connector on the harness side (such as with a paper clip).

   NOTE: For tachometer check, use an external high quality inductive tachometer.

2. Compare the readings of the vehicle tachometer and the external tachometer at every engine speed, and check if the variations are within the standard values.

   Standard value:

   <A/T>

ENGINE SPEED (r/min)	INDICATION ALLOWANCE OF TACHOMETER (r/min)
700	±100
3,000	±150
5,000	±250
6,250	±150

   <M/T>

ENGINE SPEED (r/min)	INDICATION ALLOWANCE OF TACHOMETER (r/min)
700	±100
3,000	±150
5,000	±250
6,000	±300

FUEL LEVEL SENSOR CHECK <FWD>

M1543001200494

Remove the fuel pump module and the remove the fuel level sensor (Refer to GROUP 13B, Fuel Tank P.13B-13).

FUEL LEVEL SENSOR RESISTANCE

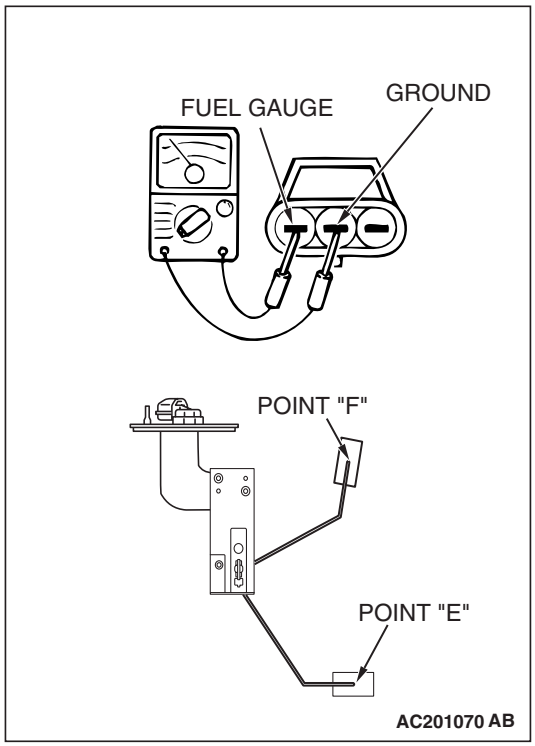

1. Check that resistance value between the fuel gauge terminal and ground terminal is at the standard value when the fuel level sensor float is between point "F" (highest) and point "E" (lowest).

   Standard value:
   - **Point "F": 2.2 –3.8 ohms**
   - **Point "E": 107.5 –112.5 ohms**
2. Check that resistance value changes smoothly when the float moves slowly between point "F" (highest) and point "E" (lowest).
3. If all checks are correct, go to fuel level sensor float height check. If any check is not correct, replace the fuel level sensor.

FUEL LEVEL SENSOR FLOAT HEIGHT

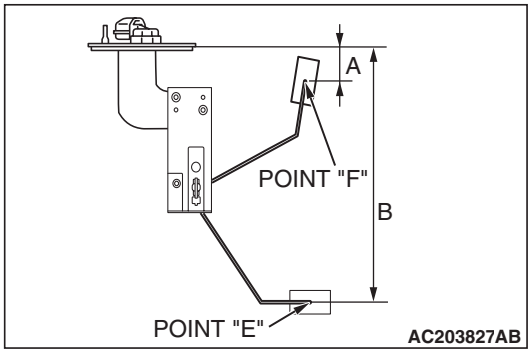

1. Move the float and measure height A at point "F" (highest) and B at point "E" (lowest) with the float arm touching stopper.

   Standard value:
   - **A: 35.4 mm (1.39 inches)**
   - **B: 186.7 mm (7.35 inches)**
2. Adjust the float arm to the standard value, then go to the thermistor check.

FUEL LEVEL SENSOR CHECK <AWD>

M1543001200502

Remove the fuel pump module and the remove the fuel level sensor (Refer to GROUP 13B, Fuel Tank P.13B-13).

FUEL LEVEL SENSOR RESISTANCE

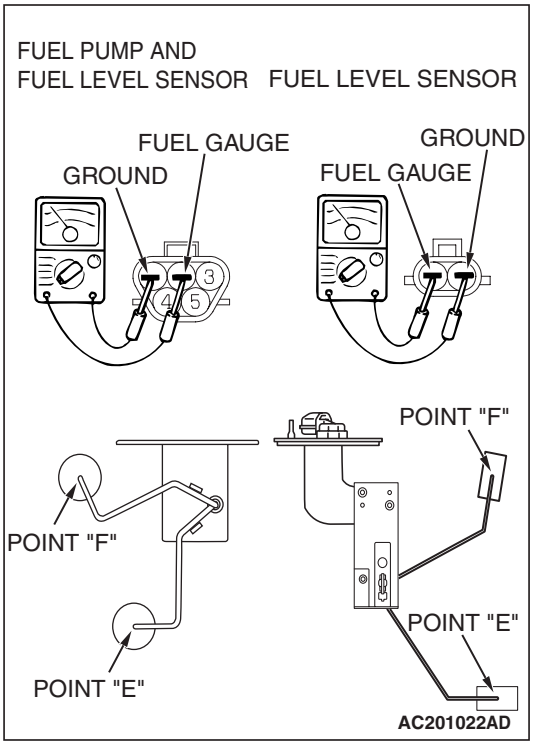

1. Check that resistance value between the fuel gauge terminal and ground terminal is at the standard value when the fuel level sensor float is between point "F" (highest) and point "E" (lowest).

   Standard value:
   - **Point "F": 1.0 –2.0 ohms**
   - **Point "E": 53.5 –56.5 ohms**
2. Check that resistance value changes smoothly when the float moves slowly between point "F" (highest) and point "E" (lowest).
3. If all checks are correct, go to fuel level sensor float height check. If any check is not correct, replace the fuel level sensor.

FUEL LEVEL SENSOR FLOAT HEIGHT

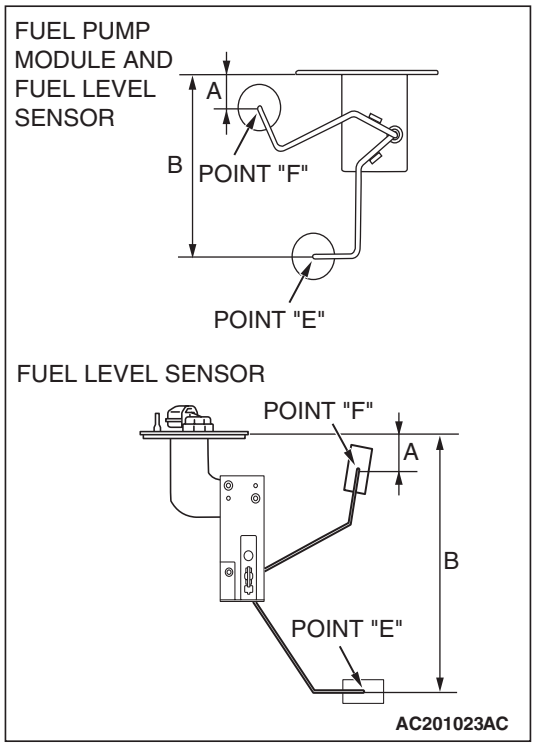

1. Move the float and measure height A at point "F" (highest) and B at point "E" (lowest) with the float arm touching stopper.

   Standard value <FUEL PUMP MODULE & FUEL LEVEL SENSOR>:
   - **A: 36.7 mm (1.44 inches)**
   - **B: 150.3 mm (5.91 inches)**

   Standard value <FUEL LEVEL SENSOR>:
   - **A: 20.8 mm (0.82 inch)**
   - **B: 193.8 mm (7.63 inches)**
2. Adjust the float arm to the standard value, then go to the thermistor check.

ENGINE COOLANT TEMPERATURE GAUGE UNIT CHECK

M1543001500235

1. Drain the engine coolant. (Refer to GROUP 00, Maintenance Service –Engine Coolant P.00-50.)
2. Remove the engine coolant temperature gauge unit.
3. Put water temperature gauge unit into the hot water in specified temperature, and ensure that basic resistance is within standard value.

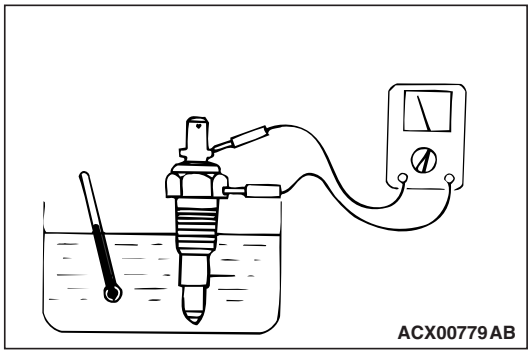

Standard value: 70C° (150°F) 104 ±13.5 ohm

Reference value

Temperature °C (°F)	Resistance Ω
50 (122)	230
60 (140)	155
80 (176)	73

4. After inspection, apply specified sealant at threads of water temperature gauge unit, and tighten to the specified torque.

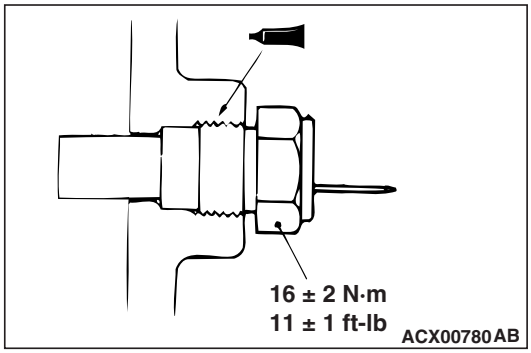

Semi-drying sealant: 3M™ AAD part No.8731 or equivalent

5. Add engine coolant. (Refer to GROUP 00, Maintenance Service –Engine Coolant P.00-50.)

COMBINATION METER ASSEMBLY AND VEHICLE SPEED SENSOR

REMOVAL AND INSTALLATION

M1543002900270

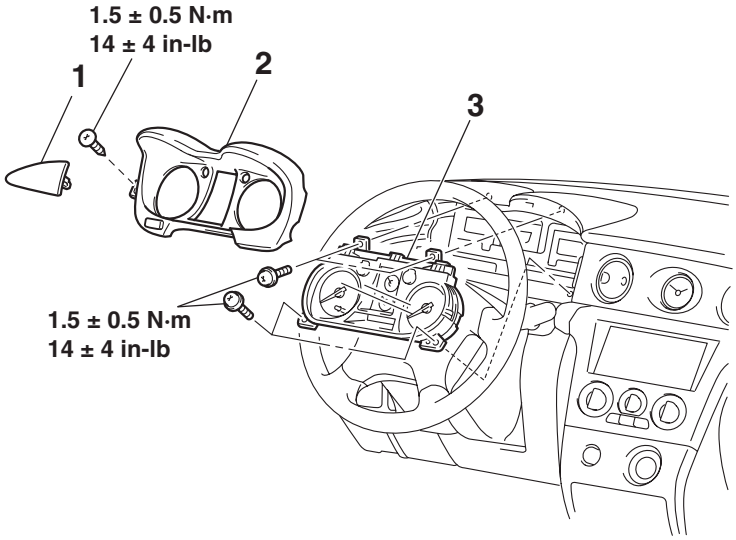

AC200132AB

REMOVAL STEPS

1. INSTRUMENT PANEL DRIVER'S SIDE GARNISH (REFER TO GROUP 52A, INSTRUMENT PANEL P.52A-18)

REMOVAL STEPS (Continued)

2. METER BEZEL (REFER TO GROUP 52A, INSTRUMENT PANEL P.52A-18)
3. COMBINATION METER ASSEMBLY

INSPECTION

M1543019503756

VEHICLE SPEED SENSOR CHECK

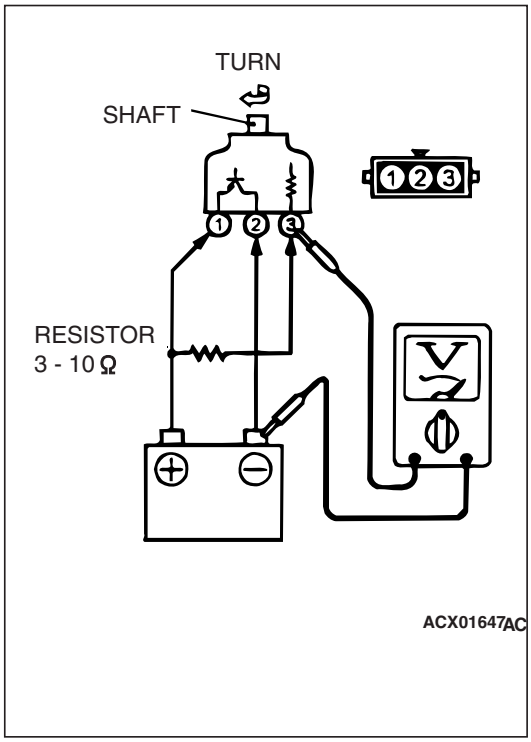

1. Remove the vehicle speed sensor and connect a 3 –10 kΩ resistor as shown in the illustration.
2. Turn the shaft of the vehicle speed sensor and check that there is voltage between terminals 2 –3. (1 turn = 4 pulses)
3. If within the standard value, the vehicle speed sensor is OK. If not within the standard value, replace the vehicle speed sensor.

   Standard value: 0 or Battery Voltage (1 turn = 4pulses)

DISASSEMBLY AND ASSEMBLY

M1543003100200

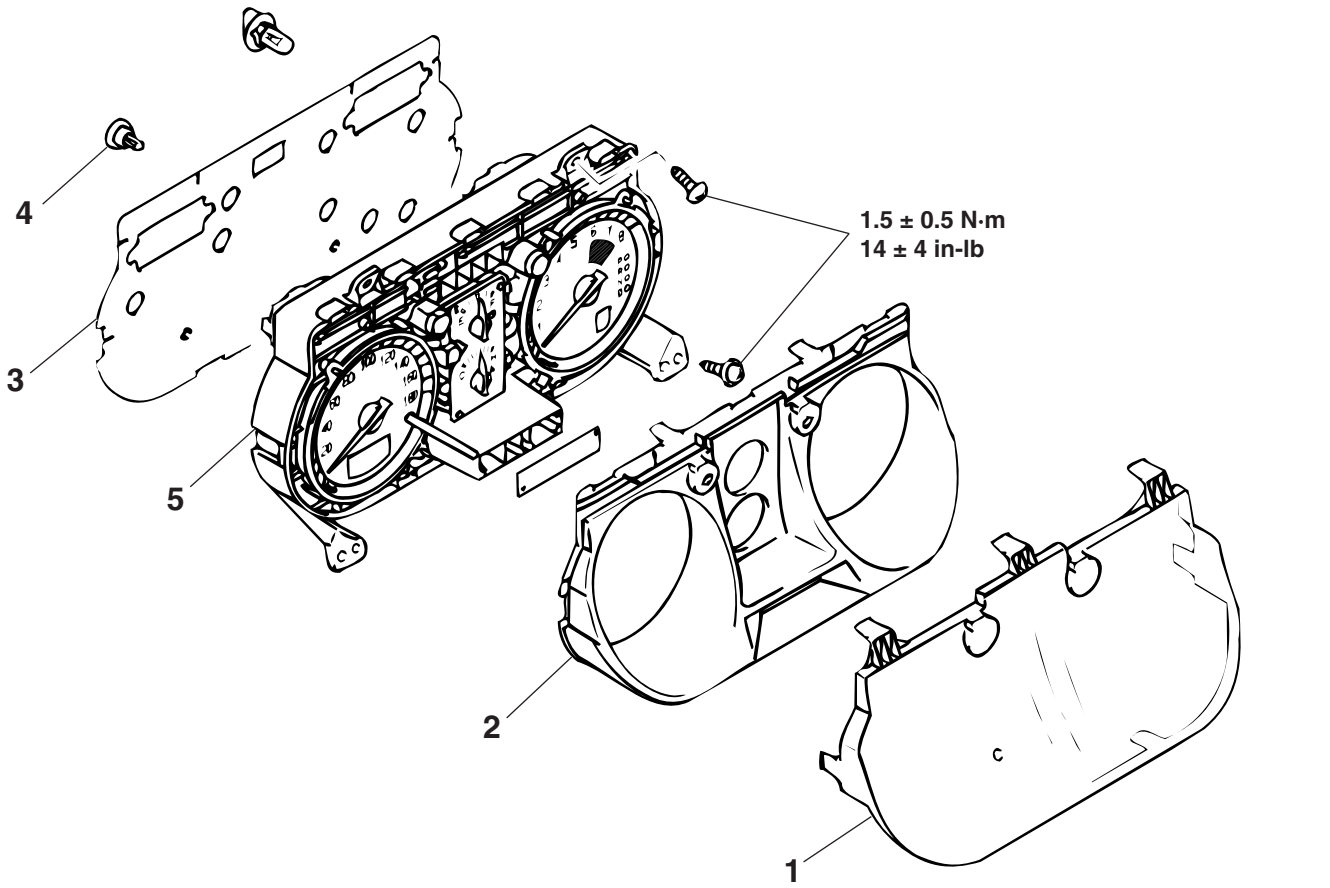

AC200344AB

DISASSEMBLY STEPS

1. METER GLASS
2. METER PANEL
3. CIRCUIT BOARD COVER

DISASSEMBLY STEPS (Continued)

4. BULB
5. COMBINATION METER ASSEMBLY

HEADLIGHT, FRONT SIDE MARKER LIGHT AND POSITION LIGHT ASSEMBLY

LIGHTING SYSTEM DIAGNOSIS

HEADLIGHT DIAGNOSIS

M1542010500757

Taillight control

The taillight lights up by turning on the taillight relay built-in the front-ECU, after receiving the taillight switch ON signal from the column switch. What's more, the lights automatically dim with the headlight automatic shutdown function.
The taillights are controlled by the Simplified Wiring System (SWS). For troubleshooting, refer to GROUP 54B, SWS Diagnosis P.54B-23.

Headlight control

The headlight lights up by turning on the headlight relay built-in the front-ECU, after receiving the headlight switch ON signal from the column switch. What's more, the lights automatically dim with the headlight automatic shutdown function.
The headlights are controlled by the Simplified Wiring System (SWS). For troubleshooting, refer to GROUP 54B, SWS Diagnosis P.54B-23.

HEADLIGHT AUTOMATIC SHUTDOWN FUNCTION

The headlight automatic shutdown function is activated with the following procedures. What's more, the user can switch the operations Yes/No mode and operation conditions from the adjustment function. Refer to GROUP 54B, ADJUSTMENT PROCEDURES OF SWS FUNCTION P.54B-650 for adjustment methods and adjustment details (post-adjustment operations).

1. Ignition switch: ON or ACC
2. Headlight switch: ON
3. Driver's door: Open (Driver's door switch: ON)
4. Ignition switch: LOCK (OFF)

   NOTE: The headlight automatic shutdown function is activated even if the order of Step 3 and 4 are reversed.

Restoration conditions from automatic light shutdown taking effect with the headlight automatic shutdown function.

- Turn OFF the headlight switch and then turn ON the headlight switch again.

  NOTE: The lights may dim again 3 minutes after the lights are restored with the headlight switch depending on the settings (adjustment functions).
- Turn the ignition switch from the "LOCK" (OFF) position to the ON position.

The headlight automatic shutdown function are controlled by the Simplified Wiring System (SWS). For troubleshooting, refer to GROUP 54B, SWS Diagnosis P.54B-23.

FRONT COMBINATION LIGHT DIAGNOSIS

The taillights (position light) and turn-signal lights are controlled by the Simplified Wiring System (SWS). For troubleshooting, refer to GROUP 54B, SWS Symptom Procedures P.54B-23.

TURN-SIGNAL LIGHT FUNCTION

The turn-signal light function takes effect according to the following conditions.

1. Ignition switch: ON or ACC
2. Turn-signal light switch (RH or LH): ON

The turn-signal lights are controlled by the Simplified Wiring System (SWS). For troubleshooting, refer to GROUP 54B, SWS Diagnosis P.54B-23.

HAZARD WARNING LIGHT FUNCTION

The hazard warning light function takes effect by turning on the hazard warning light switch.
The hazard warning lights are controlled by the Simplified Wiring System (SWS). For troubleshooting, refer to GROUP 54B, SWS Diagnosis P.54B-23.

M1542000700749

ON-VEHICLE SERVICE

HEADLIGHT AIMING

M1542000900271

PRE-AIMING INSTRUCTIONS

1. Inspect for badly rusted or faulty headlight assemblies.
2. These conditions must be corrected before a satisfactory adjustment can be made.
3. Inspect tire inflation, and adjust if it is necessary.
4. If the fuel tank is not full, place a weight in luggage room of the vehicle to simulate weight of a full tank [3 kg (6.5 pounds) per gallon.]
5. There should be no other load in the vehicle other than driver or substituted weight of approximately 70 kg (150 pounds) placed in driver's position.
6. Thoroughly clean the headlight lenses.
7. Place the vehicle on a level floor, perpendicular to a flat screen 7.62 meters (25.0 feet) away from the bulb center-marks on the headlight lens.
8. Rock vehicle sideways to allow vehicle to assume its normal position.
9. Bounce the front suspension through three (3) oscillations by applying the body weight to hood or bumper.
10. Four lines of adhesive tape (or equivalent markings) are required on screen or wall:
    (1) Position a vertical tape or mark so that it is aligned with the vehicle center line.
    (2) Measure the distance from the center-marks on the headlight lens to the floor. Transfer the measurement to the screen. Horizontal tape or mark on the screen is for reference of vertical adjustment.
    (3) Measure the distance from the center line of the vehicle to the center of each headlight. Transfer the measurement to the screen. Vertical tape or mark on the screen with reference to the center line of each headlight bulb.

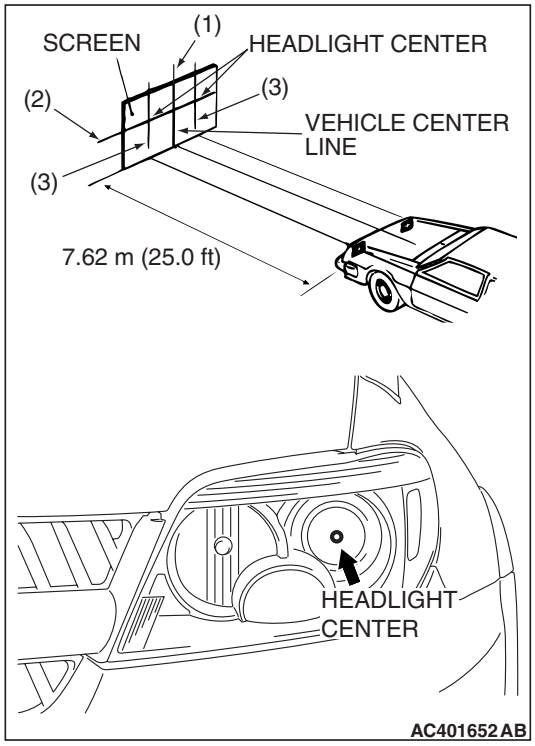

HEADLIGHT ADJUSTMENT

1. The low beam headlight should project on the screen upper edge of the beam (cut-off).

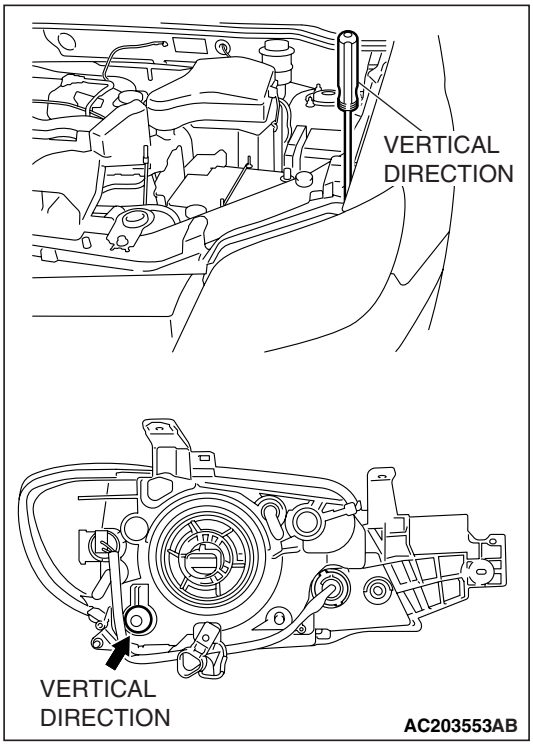

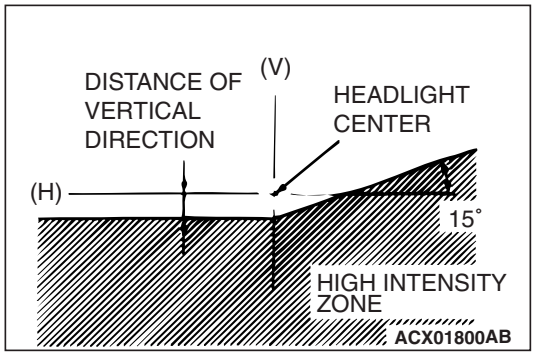

2. If not the case, turn the adjusting screws to achieve the specified low-beam cut-off location on the aiming screen.

   Standard value: Vertical direction: 0.57° below horizontal (H) Horizontal direction: Position at which the stat up point of 15° is crossed with vertical line (V)

   Limit: Vertical direction: The headlamp beam should tilt downwards by 0.17° or more.

   NOTE: There is no horizontal aim adjustment. Horizontal aim is preset and does not require adjustment.

3. When adjusting one headlight, disconnect the other headlight harness.

⚠ CAUTION

Do not cover a headlight for more than three minutes to prevent the plastic headlight lens deformation.

4. High-beam pattern should be correct when the low-beams are adjusted properly.

LUMINOUS INTENSITY MEASUREMENT

M1542001000475

1. Set the headlights to high-beam.
2. Using a photometer, and following its manufacturer's instruction manual, measure the headlight center intensity and check to be sure that the limit value is satisfied.

   Limit: 40,000 cd or more [When a screen is set 18.3 m (60.0 feet) ahead of the vehicle]

NOTE: When measuring the intensity, maintain an engine speed of 2,000 r/min, with the battery fully charged.
There may be special local regulations pertaining to headlight intensity. Be sure to make any adjustments necessary to satisfy such regulations.
If an illuminometer is used to make the measurements, convert its values to photometer values by using the following formula.

I =2Er:

- I = intensity (cd)
- E = illumination (lux)
- r = distance (m) from headlights to illuminometer

BULB REPLACEMENT

M1542001300670

Headlight Bulb (Low beam)

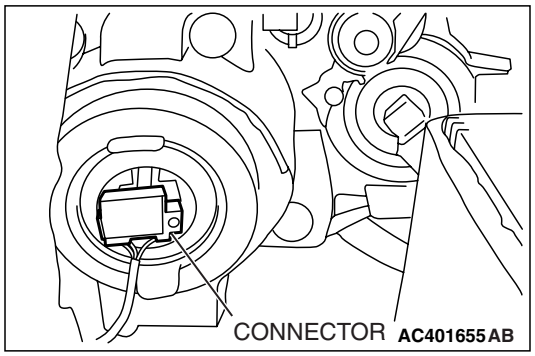

1. Disconnect the connector.

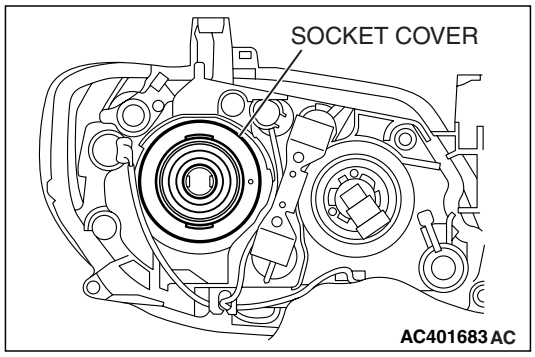

2. Remove the socket cover.

⚠ CAUTION

Do not touch the surface of the bulb with hands or dirty gloves as the bulb may pop after a short time. If the surface does become dirty, clean it with alcohol or thinner, and let it dry thoroughly before installing.

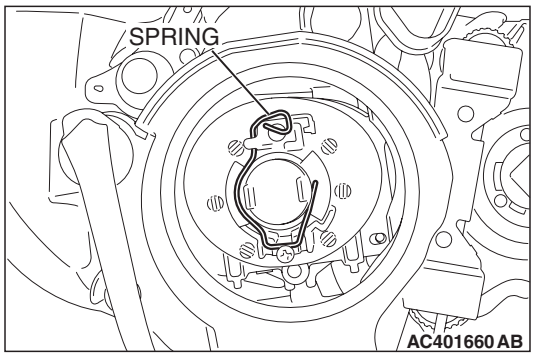

3. Release the bulb securing spring, and remove the bulb.
4. Replace the bulb, and connect the connector securely.

Headlight Bulb (High beam)

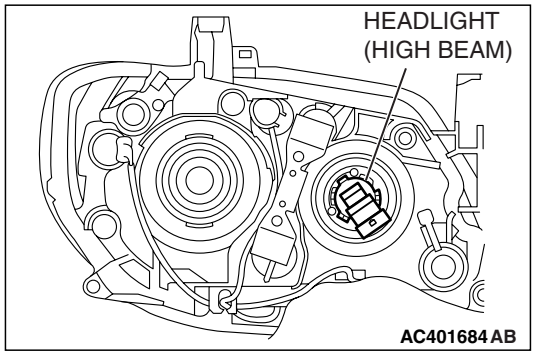

1. Disconnect the connector.

⚠ CAUTION

Do not touch the surface of the bulb with hands or dirty gloves as the bulb may pop after a short time. If the surface does become dirty, clean it with alcohol or thinner, and let it dry thoroughly before installing.

2. Twist the socket to withdraw the bulb.
3. Replace the bulb, and connect the connector securely.

Front Side-marker Light Bulb

⚠ CAUTION

Do not touch the surface of the bulb with hands or dirty gloves as the bulb may pop after a short time. If the surface does become dirty, clean it with alcohol or thinner, and let it dry thoroughly before installing.

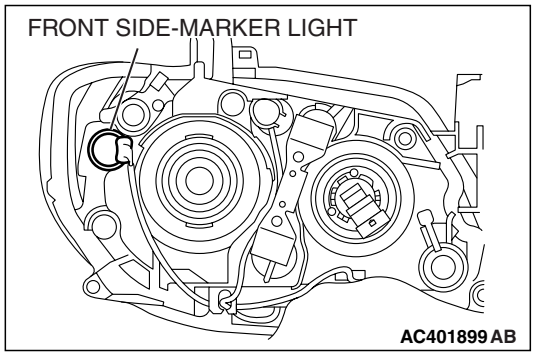

1. Twist the socket to withdraw the bulb.
2. Replace the bulb, and connect the connector securely.

Parking Light bulb

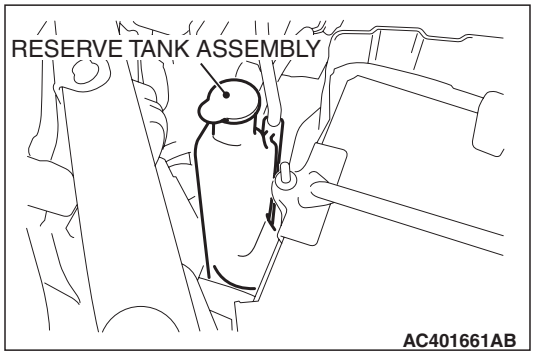

1. Lift up the reserve tank assembly, remove it from the holder, and place it in the space. (Left-side headlight only)

⚠ CAUTION

Do not touch the surface of the bulb with hands or dirty gloves as the bulb may pop after a short time. If the surface does become dirty, clean it with alcohol or thinner, and let it dry thoroughly before installing.

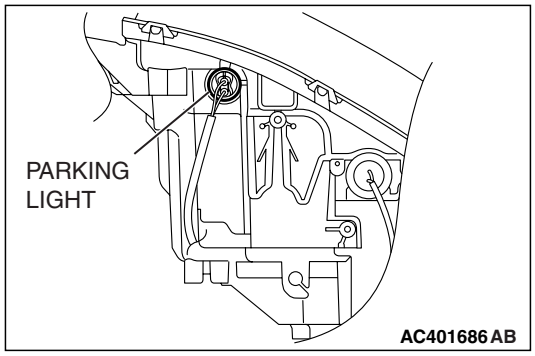

2. Twist the socket to withdraw the bulb.
3. Replace the bulb, and connect the connector securely.

Front Turn-signal Light bulb

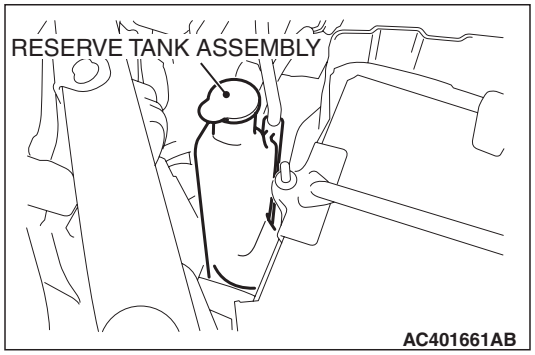

1. Lift up the reserve tank assembly, remove it from the holder, and place it in the space. (Left-side headlight only)

⚠ CAUTION

Do not touch the surface of the bulb with hands or dirty gloves as the bulb may pop after a short time. If the surface does become dirty, clean it with alcohol or thinner, and let it dry thoroughly before installing.

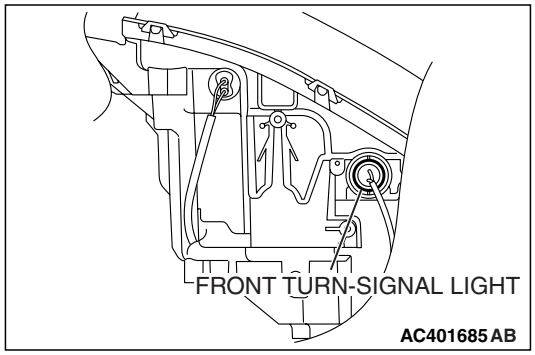

2. Twist the socket to withdraw the bulb.
3. Replace the bulb, and connect the connector securely.

SPECIAL TOOL

M1543000600778

TOOL	TOOL NUMBER AND NAME	SUPERSESSION	APPLICATION
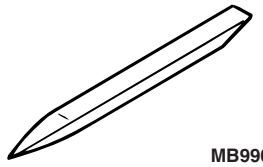 MB990784	MB990784 Ornament remover	General service tool	Removal of headlight assembly

HEADLIGHT

REMOVAL AND INSTALLATION

M1542002700518

⚠ ***WARNING***

- ***Before removal of the air bag module, refer to GROUP 52B, SRS Service Precautions (P.52B-29) and Air Bag Module (s) and Clock Spring (P.52B-355).***
- ***When removing and installing the steering wheel, do not let it bump against the air bag module.***

Post-installation Operation
Headlight Aiming Adjustment (Refer to P.54A-95).

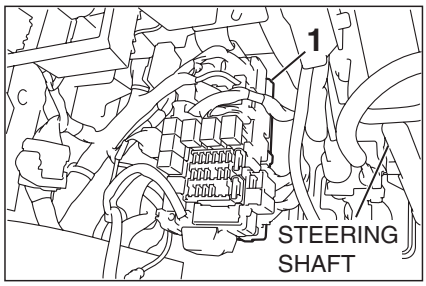

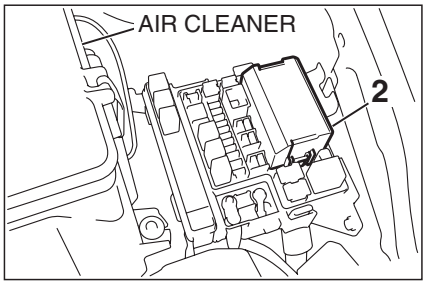

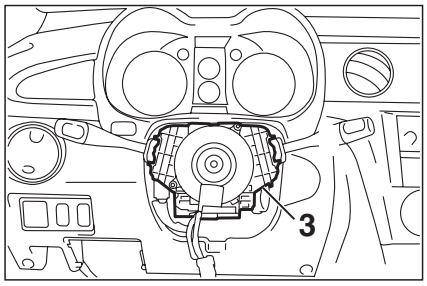

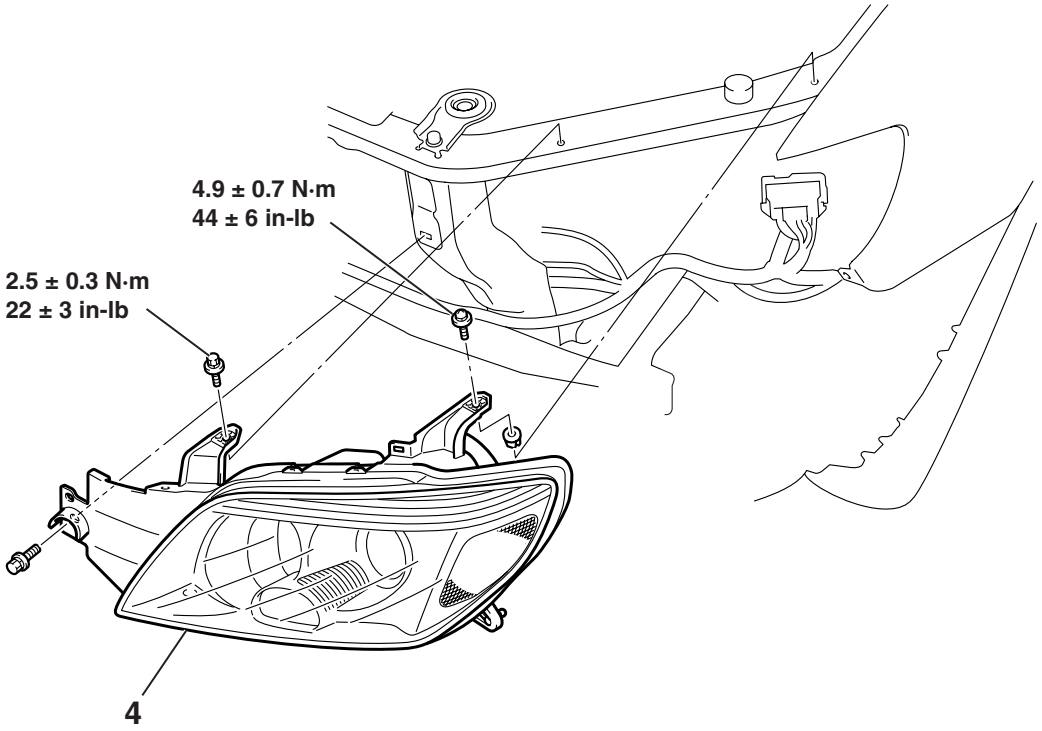

AC401664AB

1. ETACS-ECU
2. FRONT-ECU
3. COLUMN SWITCH (REFER TO P.54A-115).
- RADIATOR GRILLE (REFER TO P.51-10.)

REMOVAL STEPS

<A> 4. HEADLIGHT ASSEMBLY

TSB Revision

REMOVAL SERVICE POINT

<<A>> HEADLIGHT ASSEMBLY REMOVAL

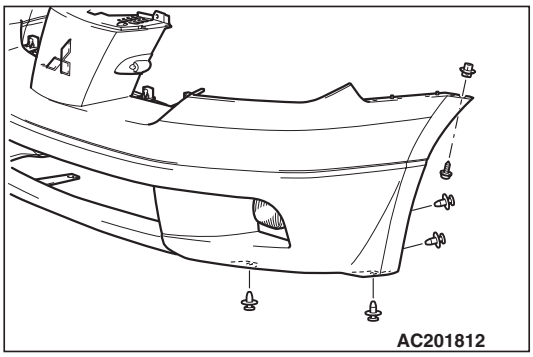

1. Remove half of the front bumper assembling clips and bolts.
   NOTE: The Figure illustrates the procedures to remove the headlight assembly (LH).
2. Slide the front bumper down to remove the headlight assembly.

FOG LIGHT

LIGHTING SYSTEM DIAGNOSIS

FOG LIGHT DIAGNOSIS

M1542010500412

The fog light lights up when the front-ECU turns ON the fog light relay (inside engine room relay box) according to the fog light light up request signal output from the ETACS-ECU when the fog light switch is turned ON, while the headlight is lit up on low beam. What's more, the lights automatically dim with the headlight automatic shutdown function.
The lights dim with the following operations executed while the fog light is ON. What's more, the lights automatically dim with the headlight automatic shutdown function.

- The fog light turns OFF (dim) when the headlight is switched to high beam. The fog light will turn ON again when the headlights are returned to low beam, at this time.
- The fog light will turn OFF (dim) when the headlight switch is turned OFF (taillight ON or taillight and headlight OFF). The fog light will not light up again though the headlight is returned to low beam, at this time.

The fog lights are controlled by the Simplified Wiring System (SWS). For troubleshooting, refer to GROUP 54B, SWS Diagnosis P.54B-23.

ON-VEHICLE SERVICE

FOG LIGHT AIMING

M1542001100234

PRE-AIMING INSTRUCTIONS

1. Inspect for badly rusted or faulty headlight assemblies.
2. These conditions must be corrected before a satisfactory adjustment can be made.
3. Inspect tire inflation, and adjust if it is necessary.
4. If the fuel tank is not full, place a weight in luggage room of the vehicle to simulate weight of a full tank [3 kg (6.5 pounds) per gallon.]
5. There should be no other load in the vehicle other than driver or substituted weight of approximately 70 kg (150 pounds) placed in driver's position.
6. Thoroughly clean fog light lenses.

7. Place the vehicle on a level floor, perpendicular to a flat screen 7.62 m (25.0 feet) away from the bulb center-marks on the fog light lens.
8. Rock vehicle sideways to allow vehicle to assume its normal position.
9. Bounce the front suspension through three (3) oscillations by applying the body weight to hood or bumper.
10. Measure the center of the fog lights as shown in the illustration.

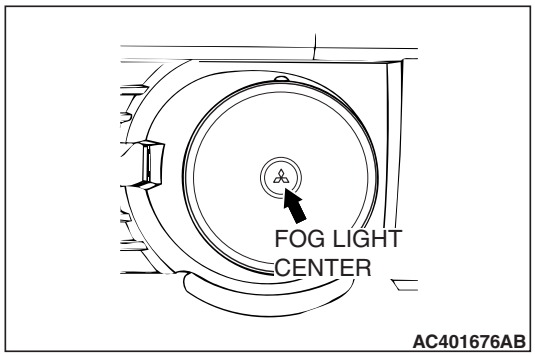

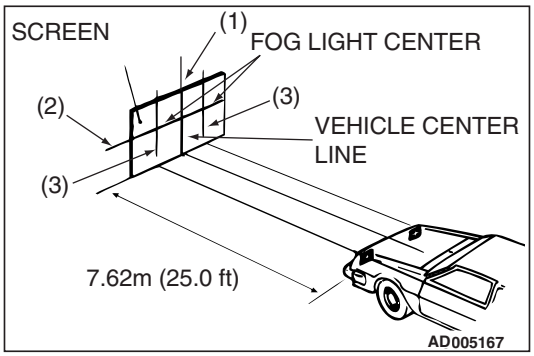

11. Four lines of adhesive tape (or equivalent markings) are required on screen or wall:
    (1) Position a vertical tape or mark so that it is aligned with the vehicle center line.
    (2) Measure the distance from the center-marks on the fog light lens to the floor. Transfer the measurement to the screen. Horizontal tape or mark on the screen is for reference of vertical adjustment.
    (3) Measure the distance from the center line of the vehicle to the center of each fog light. Transfer the measurement to the screen. Vertical tape or mark on the screen with reference to the center line of each fog light bulb.

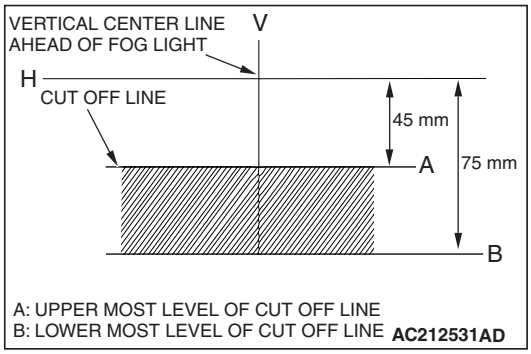

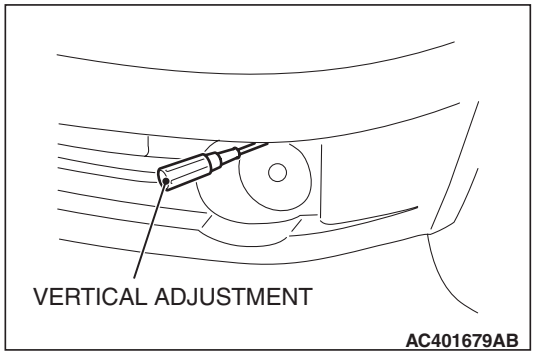

FOG LIGHT ADJUSTMENT

Check if the beam shining onto the screen is at the standard value.

Standard value:
Fog lamp cut off line (Vertical direction): Within 45 mm (0.86°) to 75 mm (1.44°) below the vertical centre line ahead of fog lamp.

NOTE: The horizontal direction is non-adjustable. If deviation of the light beam axis exceeds the standard value, check that the mounting location or some other points are faulty.

SPECIAL TOOL

M1543000600789

TOOL	TOOL NUMBER AND NAME	SUPERSESSION	APPLICATION
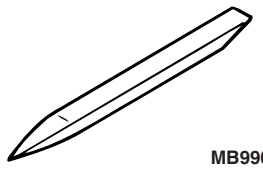 MB990784	MB990784 Ornament remover	General service tool	Removal of instrument panel garnish, meter bezel and fog light switch

FOG LIGHT

REMOVAL AND INSTALLATION

M1542001500759

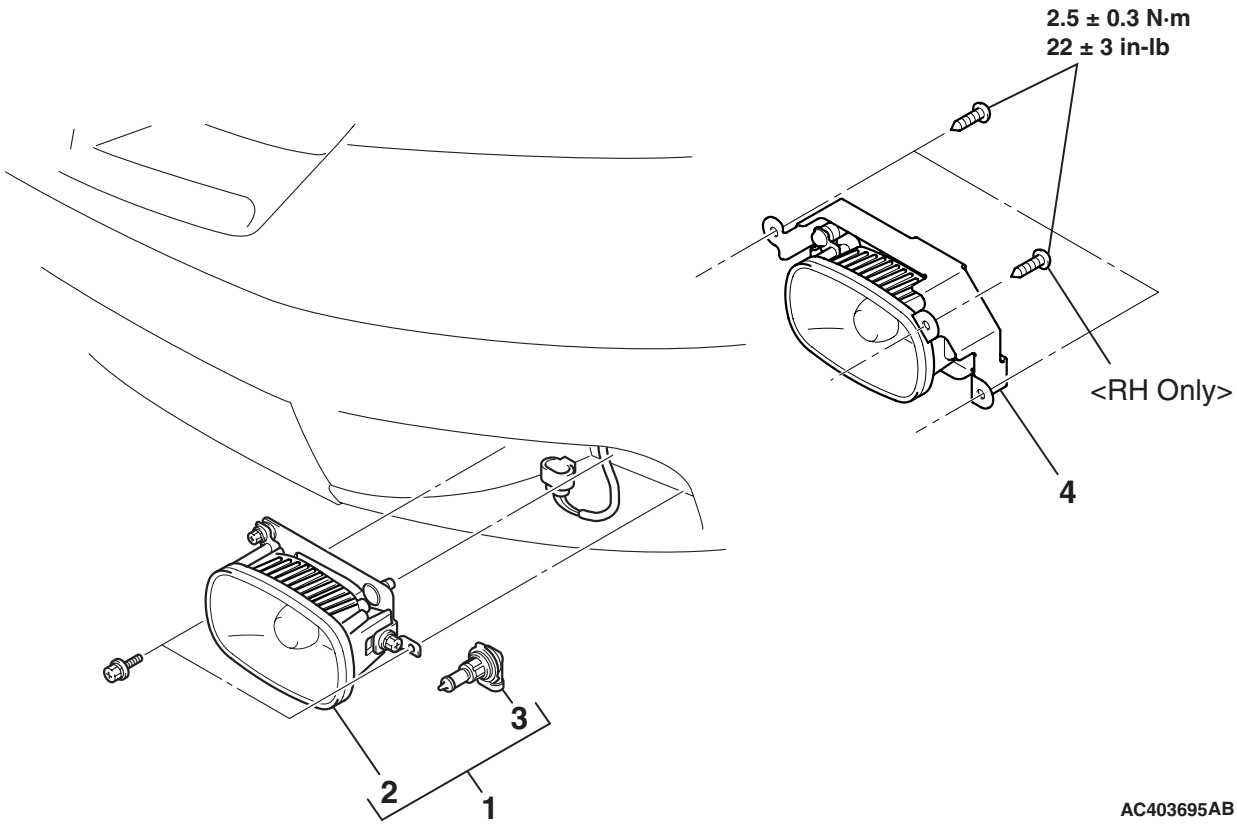

FOG LIGHT ASSEMBLY REMOVAL STEPS

1 FOG LIGHT ASSEMBLY
2. FOG LIGHT
<<**A**>> 3. FOG LIGHT BULB

FOG LIGHT AND BRACKET ASSEMBLY REMOVAL STEPS

- FRONT BUMPER (REFER TO GROUP 51, FRONT BAMPER P.51-3.)

4. FOG LIGHT AND BRACKET ASSEMBLY

REMOVAL SERVICE POINT

<<A>> FOG LIGHT BULB REMOVAL

⚠ CAUTION

- **Use the specified genuine part when replacing the bulb.**
- **Do not touch the glass portion of bulb with bare hand or dirty gloves. Should the glass portion be spoiled, remove the soil as soon as possible using alcohol or thinner and let it dry before mounting.**

Turn the fog light bulb left to remove it.

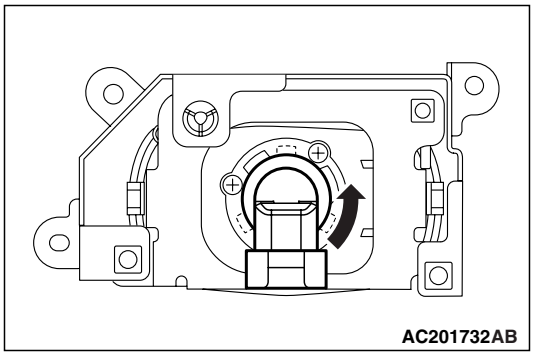

FOG LIGHT SWITCH

REMOVAL AND INSTALLATION

M1542011700129

⚠ WARNING

- ***Before removal of the air bag module, refer to GROUP 52B, SRS Service Precautions (P.52B-29) and Air Bag Module and Clock Spring (P.52B-355).***
- ***When removing and installing the steering wheel, do not let it bump against the air bag module.***

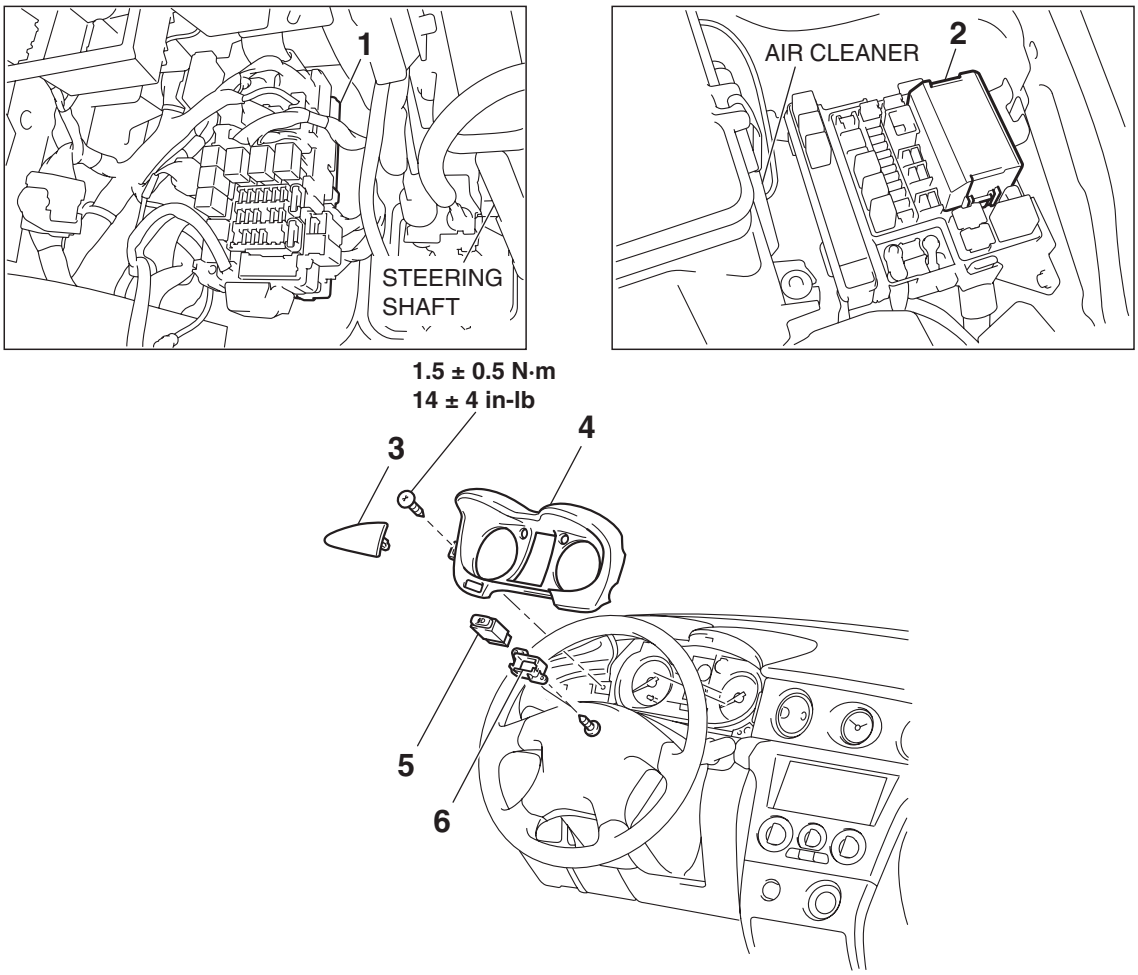

1. ETACS-ECU
2. FRONT-ECU

REMOVAL STEPS

3. INSTRUMENT PANEL DRIVER'S SIDE GARNISH (REFER TO GROUP 52A, INSTRUMENT PANEL P.52A-18)
4. METER BEZEL (REFER TO GROUP 52A, INSTRUMENT PANEL P.52A-18)
5. FOG LIGHT SWITCH
6. FOG LIGHT SWITCH BRACKET

INSPECTION

M1542011200953

FOG LIGHT SWITCH CONTINUITY CHECK

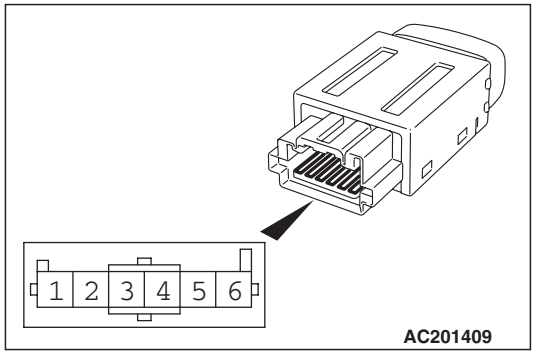

SWITCH POSITION	TESTER CONNECTION	SPECIFIED CONDITION
Pressed	5 –6	Less than 2 ohms
Released	5 –6	Open circuit

FOG LIGHT RELAY CHECK

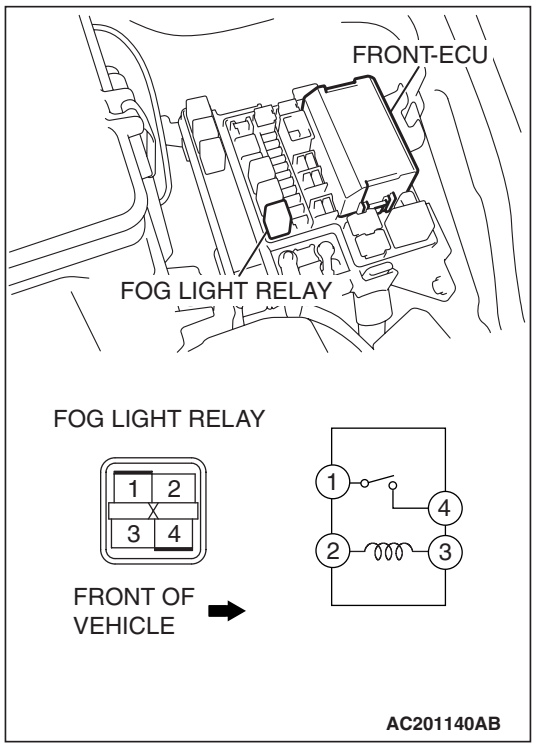

BATTERY VOLTAGE	TESTER CONNECTION	SPECIFIED CONDITION
Not supplied	1 –4	Open circuit
• Connect terminal 2 to the positive battery terminal • Connect terminal 3 to the negative battery terminal	1 –4	Less than 2 ohms

SIDE TURN-SIGNAL LIGHT

SPECIAL TOOL

M1543000600790

TOOL	TOOL NUMBER AND NAME	SUPERSESSION	APPLICATION
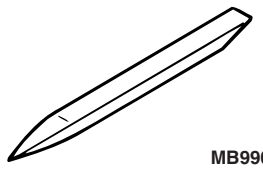 MB990784	MB990784 Ornament remover	General service tool	Removal of side turn-signal light

REMOVAL AND INSTALLATION

M1542012000037

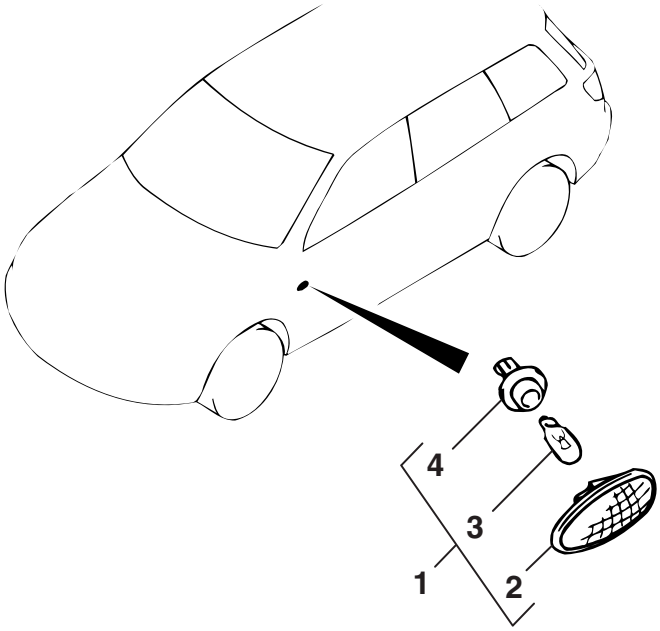

AC203309AB

REMOVAL STEPS

<<**A**>> >>**A**<< 1. SIDE TURN-SIGNAL LIGHT ASSEMBLY
2. SIDE TURN-SIGNAL LIGHT
3. BULB
4. SOCKET

REMOVAL SERVICE POINT

<<A>> SIDE TURN-SIGNAL LIGHT REMOVAL

Use a special tool, etc. to remove the side turn-signal light by pushing the fender forward, bending the hook, and then unclamping the thumb.

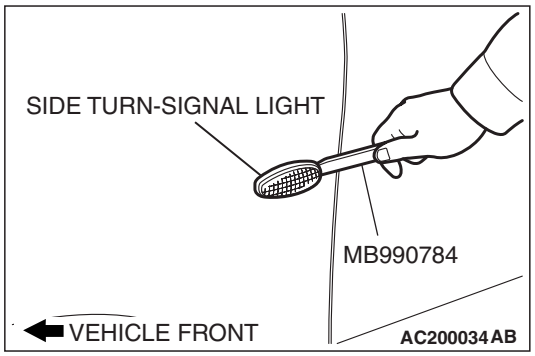

INSTALLATION SERVICE POINT

>>A<< SIDE TURN-SIGNAL LIGHT INSTALLATION

Clamp the thumb on the fender panel the assemble the side turn-signal light.

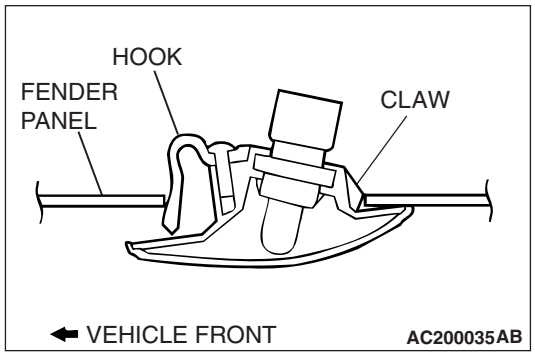

REAR COMBINATION LIGHT

LIGHTING SYSTEM DIAGNOSIS

REAR COMBINATION LIGHT DIAGNOSIS

M1542000700750

The lights setup on the rear combination light is controlled in the same manner as the lights of the headlight assembly. For details go to the reference. For troubleshooting, refer to GROUP 54B, SWS Diagnosis P.54B-23.

SPECIAL TOOL

M1543000600808

TOOL	TOOL NUMBER AND NAME	SUPERSESSION	APPLICATION
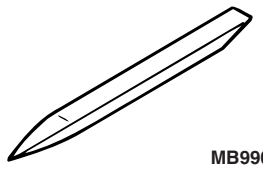 MB990784	MB990784 Ornament remover	General service tool	Removal of ventilation cap and rear combination light assembly

REAR COMBINATION LIGHT

REMOVAL AND INSTALLATION

M1542003900731

⚠ WARNING

- ***Before removal of the air bag module, refer to GROUP 52B, SRS Service Precautions (P.52B-29) and Air Bag Module (s) and Clock Spring (P.52B-355).***
- ***When removing and installing the steering wheel, do not let it bump against the air bag module.***

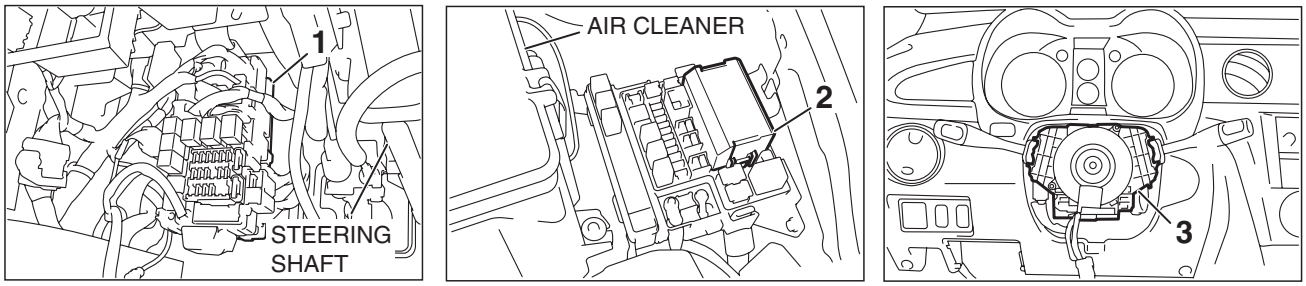

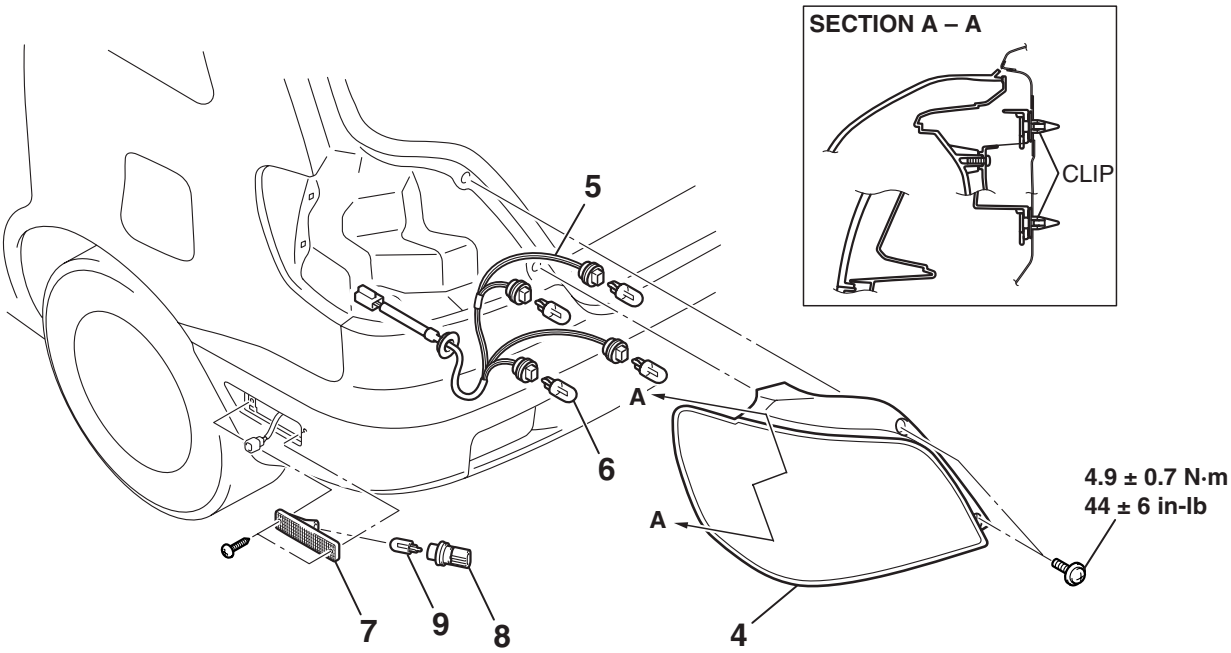

AC401682 AC

1. ETACS-ECU
2. FRONT-ECU
3. COLUMN SWITCH (REFER TO P.54A-115.)

REAR COMBINATION LIGHT REMOVAL STEPS

- VENTILATION CAP (REFER TO GROUP 52A, TRIMS P.52A-26.)
- REAR COMBINATION LIGHT CONNECTOR

REAR COMBINATION LIGHT REMOVAL STEPS (Continued)

4. REAR COMBINATION LIGHT
5. HARNESS ASSEMBLY
6. BULB

REAR SIDE MARKER LIGHT REMOVAL STEPS

7. REAR SIDE MARKER LIGHT
8. SOCKET
9. BULB

DOME LIGHT

LIGHTING SYSTEM DIAGNOSIS

DOME LIGHT DIAGNOSIS

M1542010500423

Dome light delay shutdown function

The dome light off is delayed by ETACS-ECU. The lights off delay time vary according to the conditions. The control details are as follows. The light delay off Yes/NO and delay time can be set with the settings (adjustment function). Refer to GROUP 54B, ADJUSTMENT PROCEDURES OF SWS FUNCTION P.54B-650 for adjustment methods and adjustment details (post-adjustment operations).

- The dome light lights up if the ignition switch is at the "LOCK" (OFF) position and either of the doors are opened (either of the door switches: ON). At this time, if all doors are closed (all door switches: OFF) then the light will gradually dim down to lights off in about 30 seconds.

  NOTE: When the lights are dimmed and the ignition switch is turned ON or if the door is locked, then the dimming operations stop and the lights are turned OFF.
- When the ignition switch is at the ON position and one of the doors are opened (one of the door switches: ON) then the dome light will light up. At this time, if all doors are closed (all door switches: OFF) then the lights will dim out.
- When the ignition key is pulled out the dome light lights up and then will dim out in 30 seconds. The light will dim out if the ignition key is inserted again and the door is locked while the timer is activated.

The dome light is controlled by the Simplified Wiring System (SWS). For troubleshooting, refer to GROUP 54B, SWS Diagnosis P.54B-23.

Interior light automatic cut function

The interior light automatic cut function, dims out the dome light and other interior lights by activating the keep relay built-in the ETACS-ECU when the ignition switch is OFF and the multi-purpose fuse loaded signals built-in the ETACS-ECU is ON and 30 second passes. The lights light back up if the ignition switch is turned to the ON position or either of the doors is opened (either of the door switches: ON). The function Yes/No feature can be changed with the settings (adjustment function). Refer to GROUP 54B, ADJUSTMENT PROCEDURES OF SWS FUNCTION P.54B-650 for adjustment methods and adjustment details (post-adjustment operations).
The headlights are controlled by the Simplified Wiring System (SWS). For troubleshooting, refer to GROUP 54B, SWS Diagnosis P.54B-23.

HIGH-MOUNTED STOPLIGHT

REMOVAL AND INSTALLATION

M1542005100269

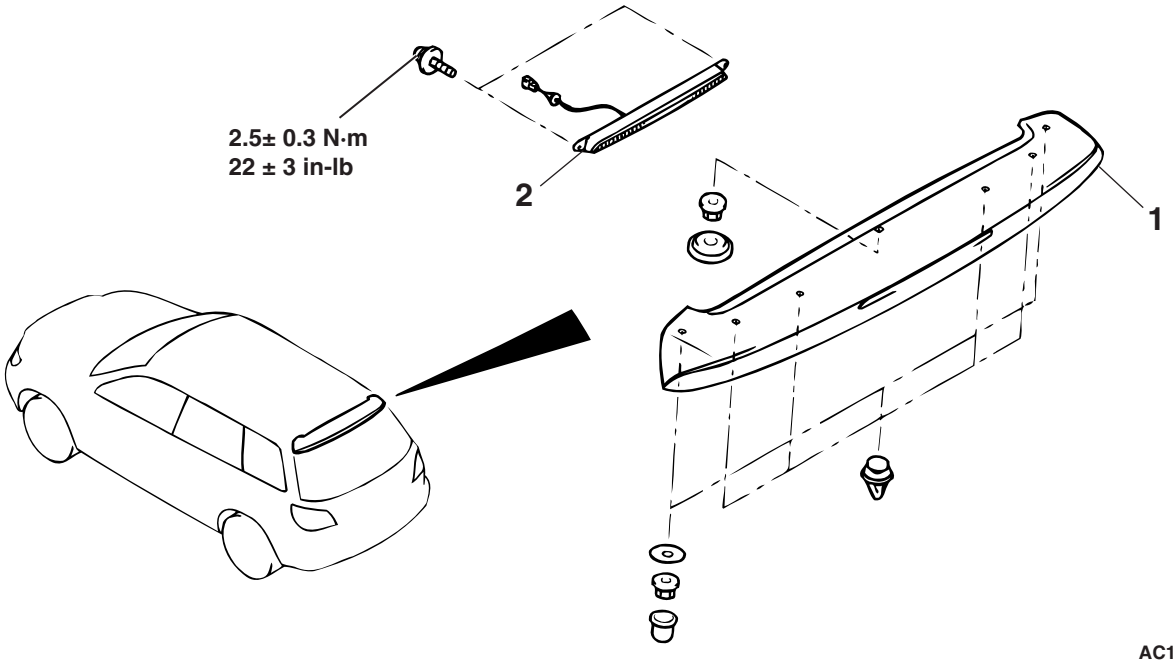

AC100674AE

REMOVAL STEPS

- LIFTGATE UPPER TRIM (REFER TO GROUP 52A, LIFTGATE TRIM P.52A-33.)
- HIGH-MOUNTED STOPLIGHT CONNECTOR CONNECTION

REMOVAL STEPS (Continued)

1. TAILGATE SPOILER
2. HIGH-MOUNTED STOPLIGHT

RHEOSTAT

SPECIAL TOOL

M1543000600820

TOOL	TOOL NUMBER AND NAME	SUPERSESSION	APPLICATION
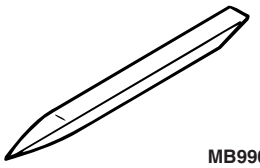 MB990784	MB990784 Ornament remover	General service tool	Removal of instrument under cover and rheostat

REMOVAL AND INSTALLATION

M1542006000180

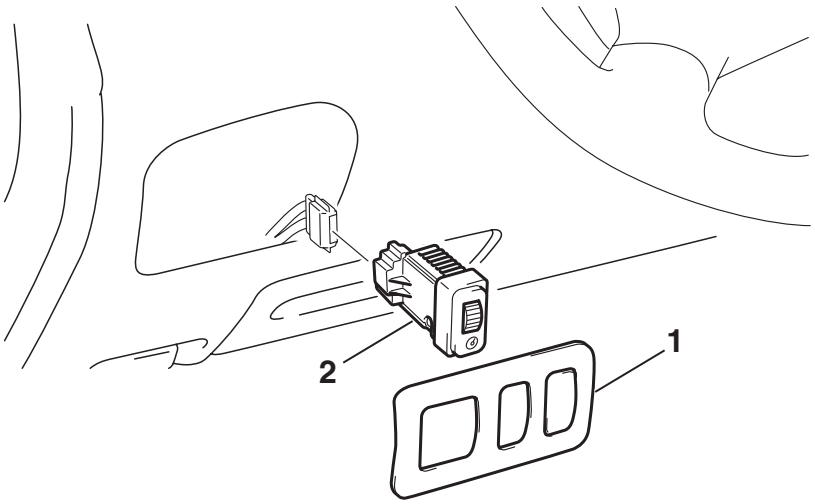

AC201116 AB

REMOVAL STEPS

1. SWITCH PANEL
2. RHEOSTAT

INSPECTION

M1543019501426

REOSTAT RESISTANCE CHECK

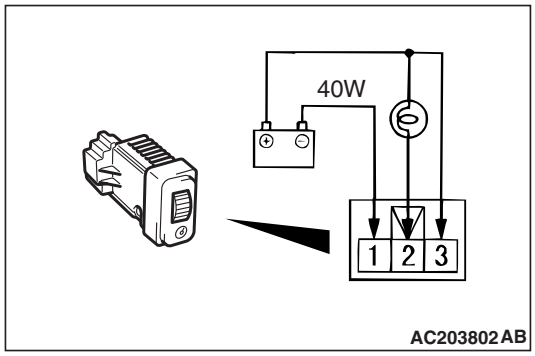

AC203802 AB

1. Connect the battery and the test bulb (40 W) as shown in the illumination.
2. Operate the rheostat, and if brightness changes smoothly without switching off, rheostat function is normal.

HAZARD WARNING LIGHT SWITCH

SPECIAL TOOL

M1543000600831

TOOL	TOOL NUMBER AND NAME	SUPERSESSION	APPLICATION
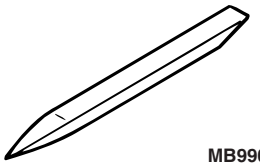 MB990784	MB990784 Ornament remover	General service tool	Removal of center lower panel assembly

LIGHTING SYSTEM DIAGNOSIS

M1542000700772

The hazard warning lights are controlled by the Simplified Wiring System (SWS). For troubleshooting, refer to GROUP 54B, SWS Symptom Procedures P.54B-23.

HAZARD WARNING LIGHT SWITCH

REMOVAL AND INSTALLATION

M1542006600290

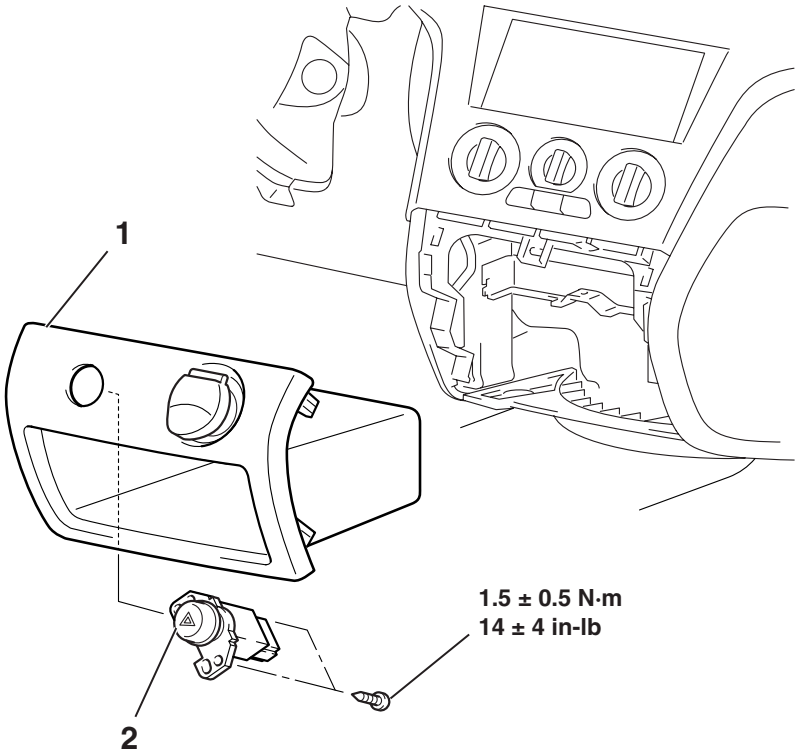

AC100541AB

REMOVAL STEPS

1. CENTER LOWER PANEL ASSEMBLY (REFER TO GROUP 52A, INSTRUMENTAL PANEL P.52A-18.)
2. HAZARD WARNING LIGHT SWITCH

INSPECTION

M1543019501437

HAZARD WARNING LIGHT SWITCH CONTINUITY CHECK

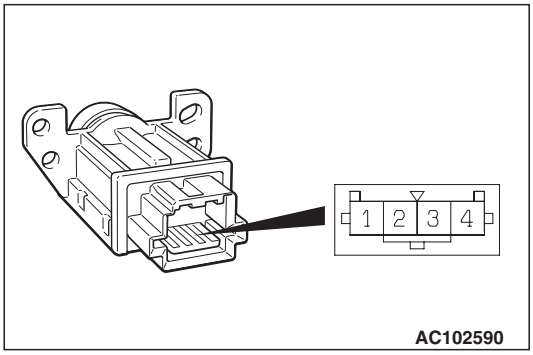

SWITCH POSITION	TESTER CONNECTION	SPECIFIED CONDITION
Released	1 –2	Open circuit
Pressed	1 –2	Less than 2 ohms

COLUMN SWITCH

SPECIAL TOOL

M1543000600842

TOOL	TOOL NUMBER AND NAME	SUPERSESSION	APPLICATION
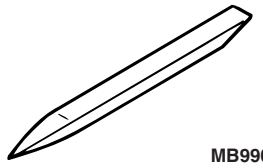 MB990784	MB990784 Ornament remover	General service tool	Removal of column cover

REMOVAL AND INSTALLATION

M1543009100264

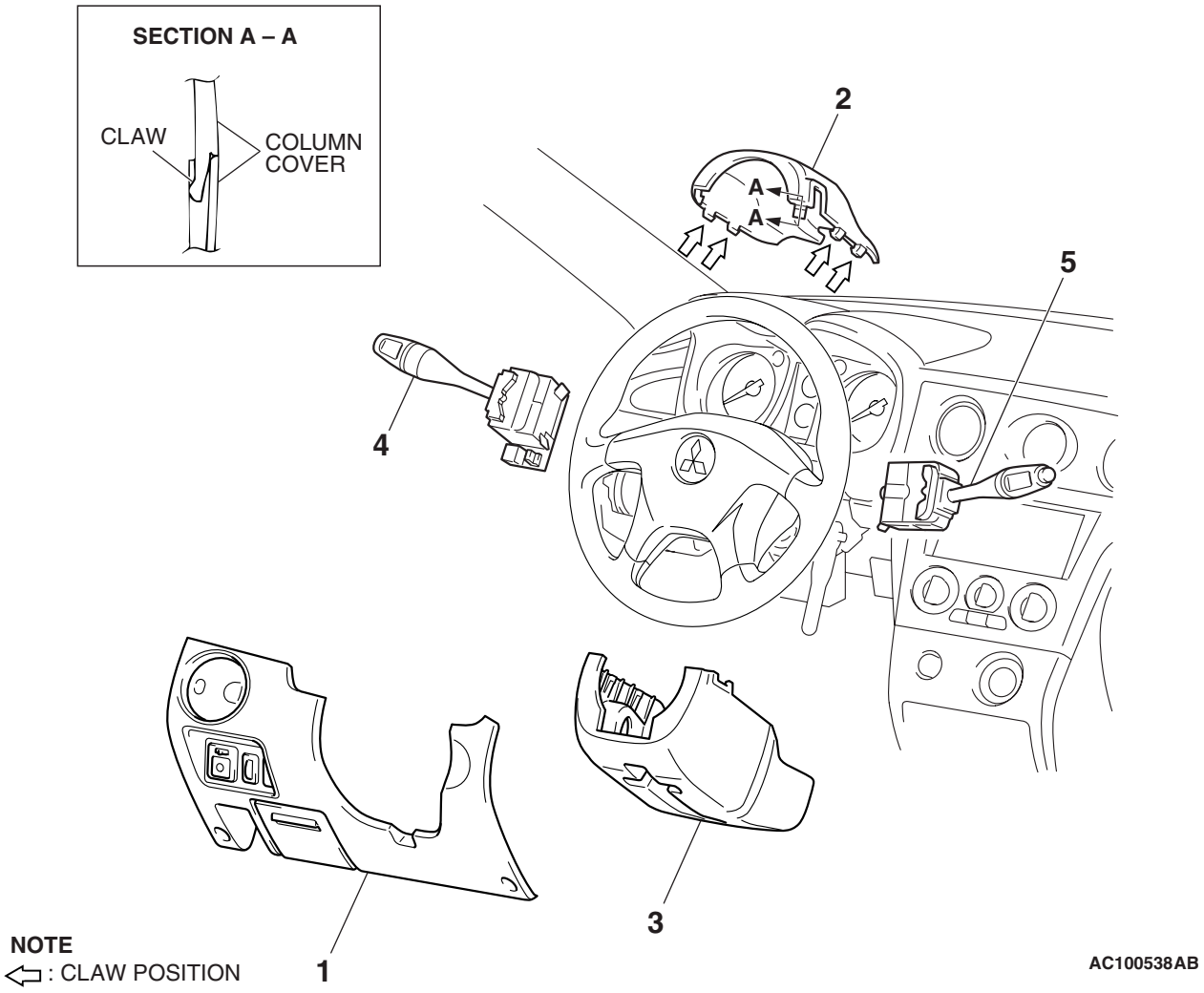

REMOVAL STEPS

1. INSTRUMENT LOWER PANEL (REFER TO GROUP 52A, INSTRUMENT PANEL P.52A-18)
2. COLUMN COVER UPPER

REMOVAL STEPS (Continued)

3. COLUMN COVER LOWER
4. TURN-SIGNAL AND LIGHTING SWITCH
5. WINDSHIELD WIPER AND WINDSHIELD WASHER SWITCH

INSPECTION

M1543019501448

TURN-SIGNAL AND LIGHTING SWITCH CHECK

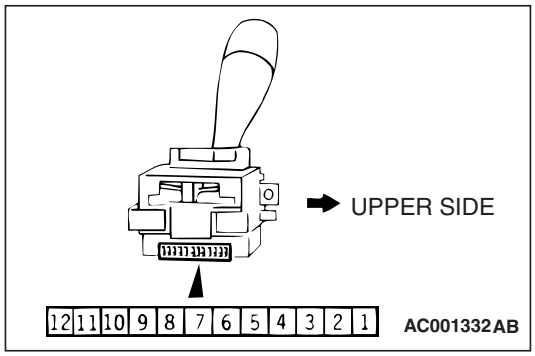

SWITCH POSITION	TESTER CONNECTION	SPECIFIED CONDITION
OFF	5 –7, 5 –9, 7 –9 1 –2, 1 –3, 1 –11, 1 –12, 2 –3, 2 –11, 2 –12, 3 –11, 3 –12, 11 –12	Open circuit
Taillight switch ON	5 –9	Less than 2 ohms
Headlight switch ON	5 –7, 5 –9, 7 –9	Less than 2 ohms
Passing switch ON	2 –12	Less than 2 ohms
Dimmer switch ON	2 –11, 2 –12, 11 –12	Less than 2 ohms
Turn-signal light switch (LH) ON	1 –2	Less than 2 ohms
Turn-signal light switch (RH) ON	2 –3	Less than 2 ohms

HORN

HORN DIAGNOSIS <VEHICLE WITH KEYLESS ENTRY SYSTEM>

M1543000700593

The keyless entry system horn answerback are controlled by the Simplified Wiring System (SWS). For troubleshooting, refer to GROUP 54B, SWS Diagnosis P.54B-23.

REMOVAL AND INSTALLATION

M1543007900275

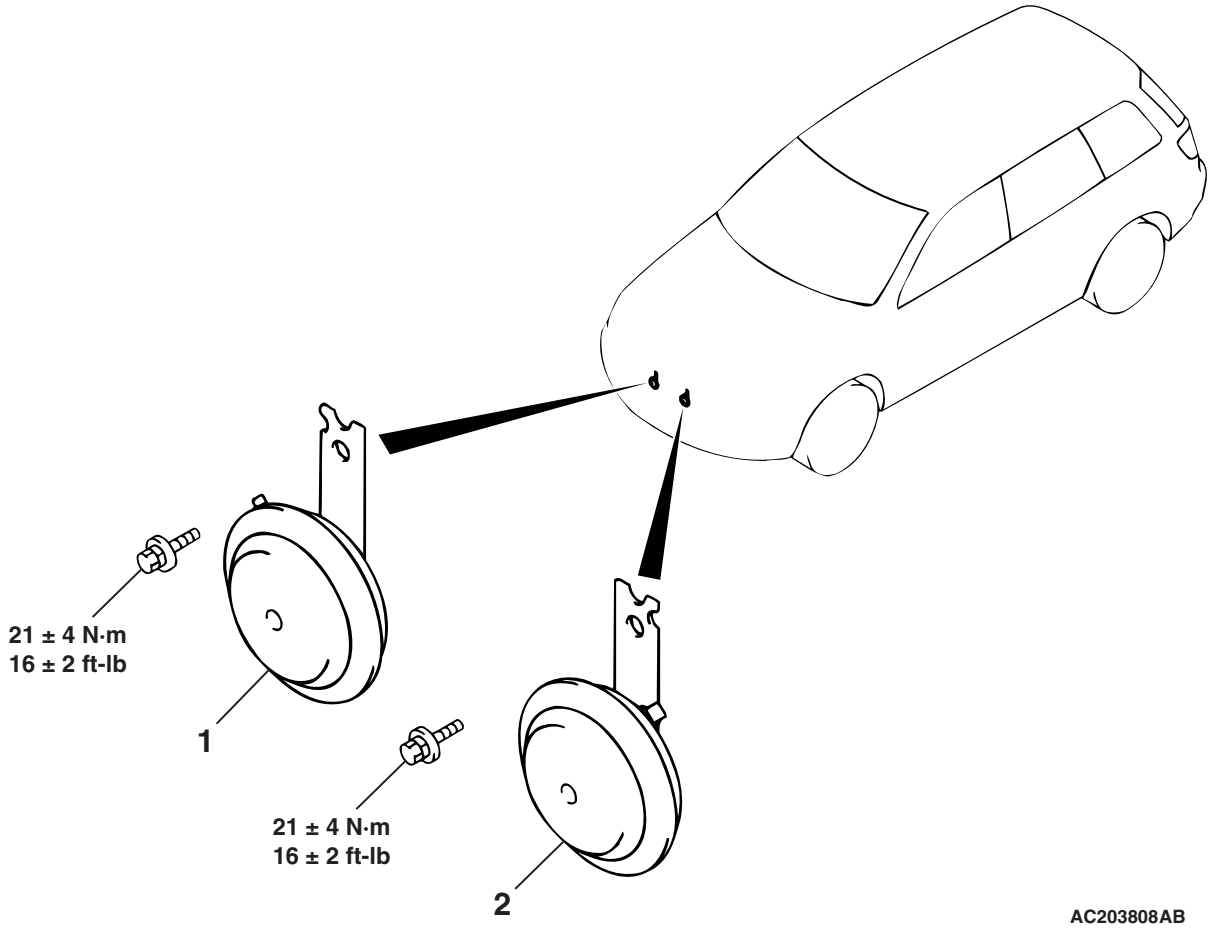

REMOVAL STEPS

1. HORN <HIGH>
2. HORN <LOW>

INSPECTION

M1543019501459

HORN RELAY CONTINUITY CHECK

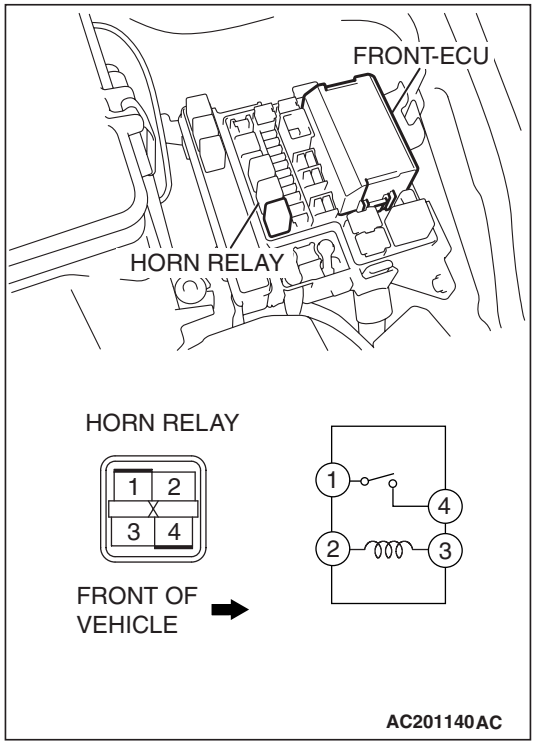

BATTERY VOLTAGE	TESTER CONNECTION	SPECIFIED CONDITION
Not applied	1 –4	Open circuit
• Connect terminal 3 to the positive battery terminal • Connect terminal 2 to the negative battery terminal	1 –4	Less than 2 ohms

CLOCK

SPECIAL TOOL

M1543000600853

TOOL	TOOL NUMBER AND NAME	SUPERSESSION	APPLICATION
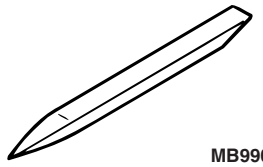 MB990784	MB990784 Ornament remover	General service tool	Removal of instrument panel garnish, meter bezel and instrumental panel center clock panel

REMOVAL AND INSTALLATION

M1543005900086

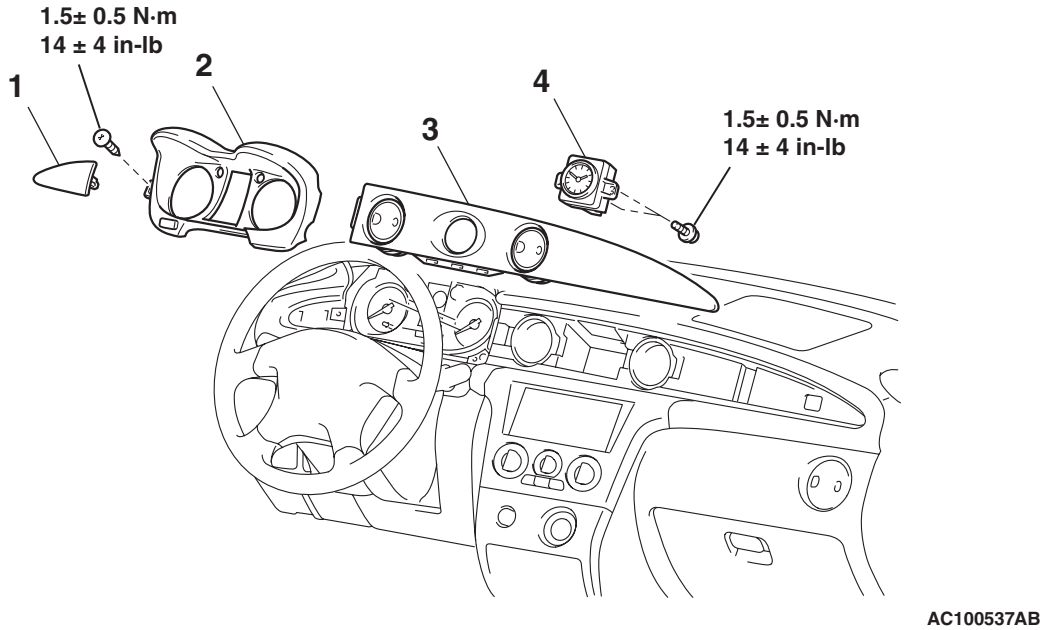

REMOVAL STEPS

1. INSTRUMENT PANEL DRIVER'S SIDE GARNISH (REFER TO GROUP 52A, INSTRUMENT PANEL P.52A-18)
2. METER BEZEL (REFER TO GROUP 52A, INSTRUMENT PANEL P.52A-18)

REMOVAL STEPS (Continued)

3. INSTRUMENT PANEL CLOCK GARNISH (REFER TO GROUP 52A, INSTRUMENT PANEL P.52A-18)
4. CLOCK

CIGARETTE LIGHTER AND ACCESSORY SOCKET

SPECIAL TOOL

M1543000602912

TOOL	TOOL NUMBER AND NAME	SUPERSESSION	APPLICATION
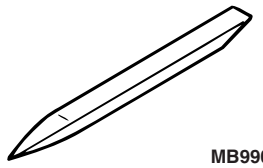 MB990784	MB990784 Ornament remover	General service tool	Removal of center lower panel assembly and accessory socket

REMOVAL AND INSTALLATION

M1543013500157

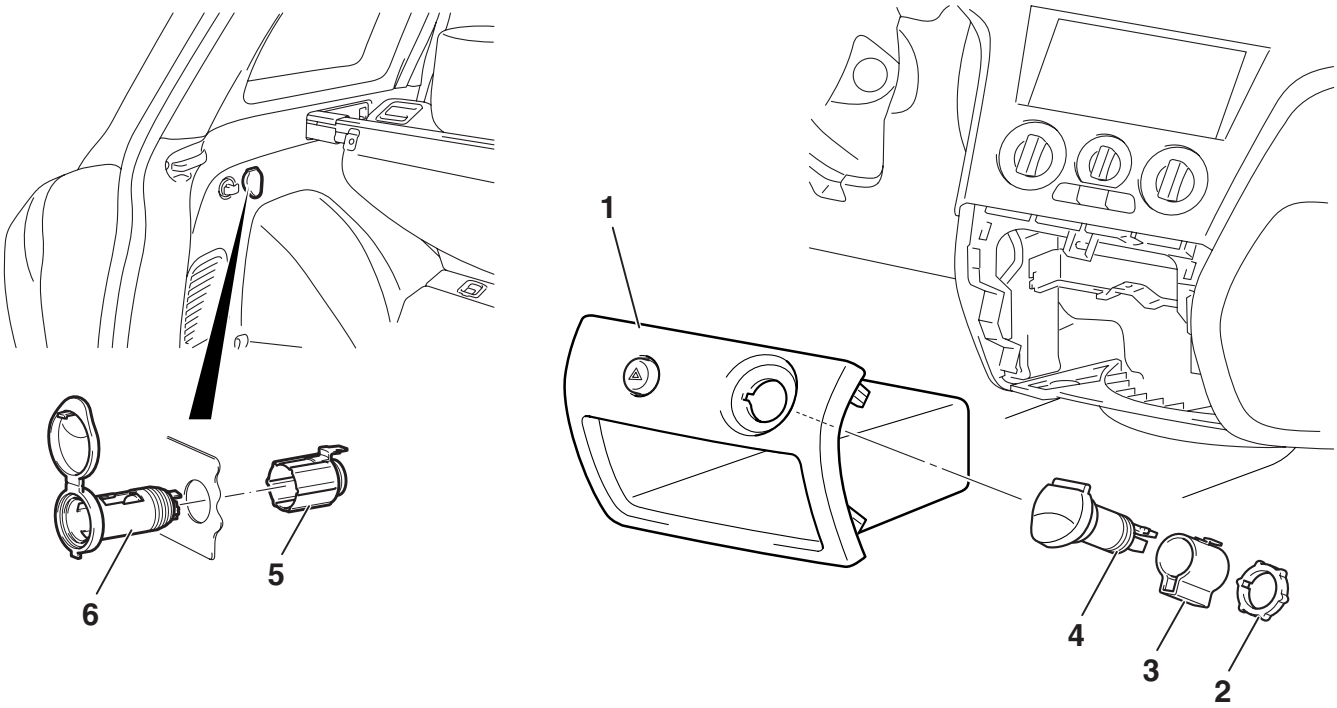

AC100544 AB

REMOVAL STEPS <CENTER LOWER PANEL >

1. CENTER LOWER PANEL ASSEMBLY (REFER TO GROUP 52A, FLOOR CONSOLE P.52A-24.)
2. FIXING RING
3. SOCKET CASE
4. ACCESSORY SOCKET

REMOVAL STEPS <QUARTER TRIM >

- QUARTER TRIM LOWER (LH) (REFER TO GROUP 52A, TRIM P.52A-26.)

5. SOCKET CASE
6. ACCESSORY SOCKET

RADIO AND TAPE PLAYER

RADIO WITH TAPE PLAYER AND CD PLAYER, SPEAKER AND ANTENNA DIAGNOSIS

INTRODUCTION TO AUDIO SYSTEM DIAGNOSIS

M1543009900840

The diagnosis for symptoms such as noise being emitted, no sound being played, or sound coming only out of one side while listening to the audio system or tape is provided.

TROUBLESHOOTING STRATEGY

M1544004800238

Use these steps to plan your diagnostic strategy. If you follow them carefully, you will be sure that you have exhausted most of the possible ways to find audio system fault.

1. Gather information from the customer.
2. Verify that the condition described by the customer exists.
3. Find the malfunction by following the Symptom Chart.
4. Verify malfunction is eliminated.

SYMPTOM CHART

M1544004900257

SYMPTOM		INSPECTION PROCEDURE	REFERENCE PAGE
Power of radio and CD player does not turn ON when the ignition switch is in the "ACC" position or "ON" position.		1	P.54A-123
No sound. <vehicles with amplifier>		2	P.54A-128
No sound from one speaker. <vehicles without amplifier>		3	P.54A-133
No sound from one speaker. <vehicles with amplifier>		4	P.54A-147
Noise	Noise appears at certain places when traveling (AM).	5	P.54A-162
	Noise appears at certain places when traveling (FM).	6	P.54A-163
	Mixed with noise, only at night (AM).	7	P.54A-164
	Broadcasts can be heard but both AM and FM have a lot of noise.	8	P.54A-165
	There is more noise on either AM or FM.	9	P.54A-166
	There is noise when starting the engine.	10	P.54A-167
	Some noise appears when there is vibration or shocks during traveling.	11	P.54A-168
	Noise sometimes appears on FM during traveling.	12	P.54A-169
	Ever-present noise.	13	P.54A-169

SYMPTOM		INSPECTION PROCEDURE	REFERENCE PAGE
Radio	There is noise but no reception for both AM and FM or no sound from AM, or no sound from FM.	14	P.54A-170
	Poor reception.	15	P.54A-170
	Distortion on AM or on both AM and FM.	16	P.54A-171
	Distortion on FM only.	17	P.54A-172
	Using the auto select function, too few automatic stations are selected.	18	P.54A-172
	Preset stations are erased.	19	P.54A-173
CD player	CD can not be inserted.	20	P.54A-175
	No sound (CD only).	21	P.54A-176
	CD sound skips.	22	P.54A-176
	Sound quality is poor.	23	P.54A-177
	CD cannot be ejected.	24	P.54A-177

SYMPTOM PROCEDURES

INSPECTION PROCEDURE 1: Power of radio and CD player does not turn ON when the ignition switch is in the "ACC" position or "ON" position.

Radio and CD Player Power Supply Circuit

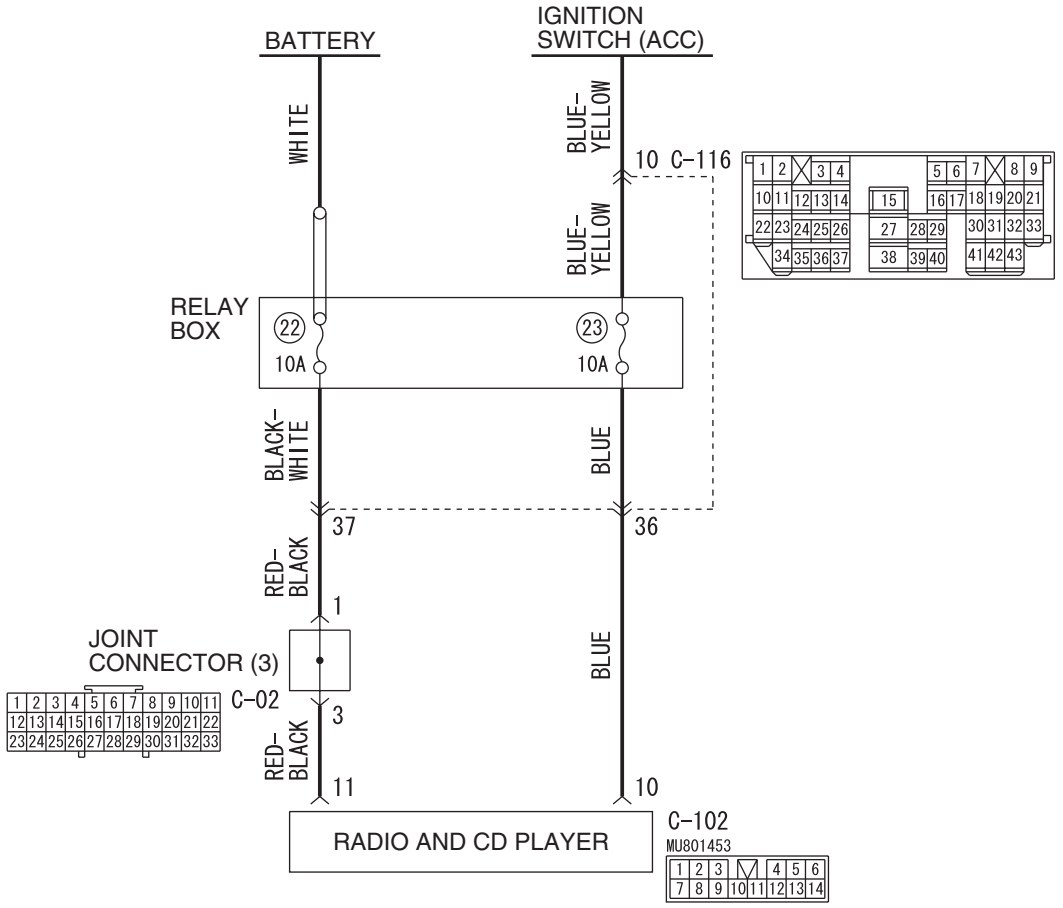

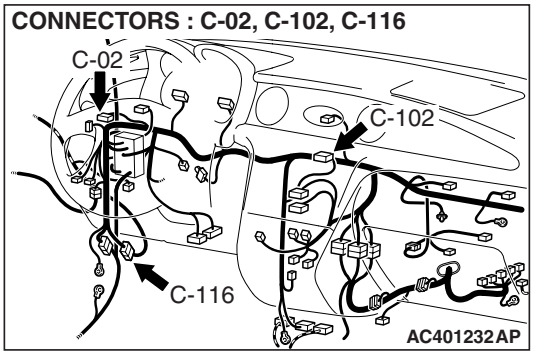

CIRCUIT OPERATION

Power is supplied to the radio and CD player when the ignition switch is in the "ACC" position or "ON" position. When the previous ignition switch is in the "OFF" position by battery power, the "ON" or "OFF" state of the radio and CD player is saved.

TECHNICAL DESCRIPTION (COMMENT)

The cause is probably a faulty radio and CD player power supply circuit system.

TROUBLESHOOTING HINTS

- Damaged wiring harness or connector.
- Malfunction of the radio and CD player.

DIAGNOSIS

Required Special Tool:

- MB991223: Harness set

STEP 1. Check to see that the power turns ON when the power switch is turned ON.

(1) Turn the ignition switch to "ACC" position.
(2) Turn ON the radio and CD player power switch.

Q: Is it possible to put the radio and CD player power in the "ON" position?

YES : Go to Step 2.
NO : Go to Step 5.

STEP 2. Check radio and CD player connector C-102 for damage.

Q: Are radio and CD player connector C-102 in good condition?

YES : Go to Step 3.
NO : Repair or replace the connector. Refer to GROUP 00E, Harness Connector Inspection P.00E-2. If the power switch is turned on, the radio and CD player should operate normally.

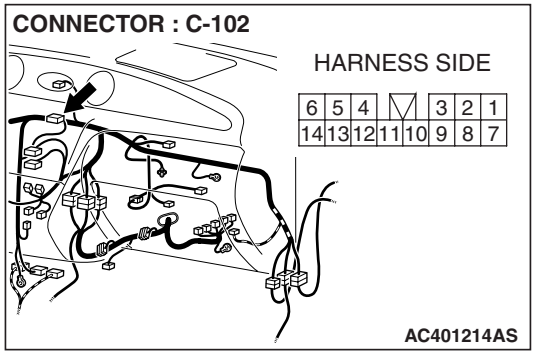

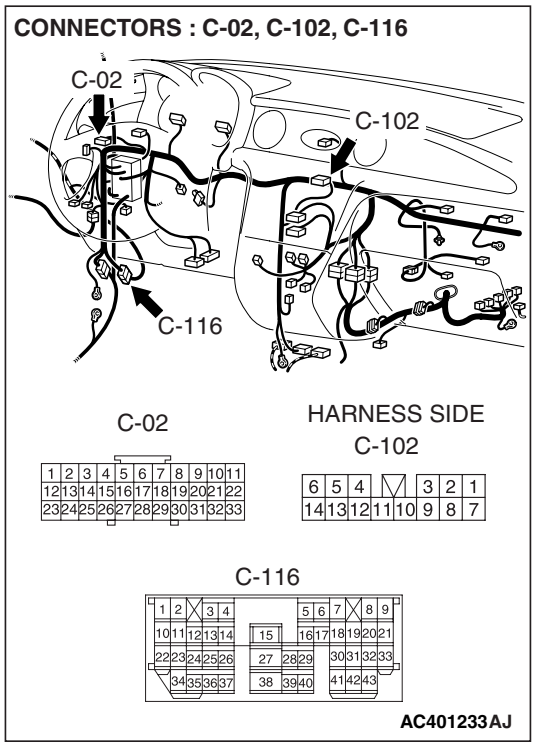

STEP 3. Check the wiring harness between radio and CD player connector C-102 (terminal 11) and battery.

NOTE: After inspecting intermediate connector C-116 and joint connector (3) C-02, inspect the wire. If intermediate connector C-116 or joint connector (3) C-02 are damaged, repair or replace it. Refer to GROUP 00E, Harness Connector Inspection P.00E-2.

Q: Are the wiring harness between radio and CD player connector C-102 (terminal 11) and battery in good condition?

YES : Go to Step 4.

NO : Repair the wiring harness. If the power switch is turned on, the radio and CD player should operate normally.

STEP 4. Check the assembling state of the radio and CD player.

NOTE: The radio and CD player are grounded to the instrument panel center reinforcement directly.

Q: Are the radio and CD player installed correctly?

YES : Repair or replace the radio and CD player. If the power switch is turned on, the radio and CD player should operate normally.

NO : Install properly. If the power switch is turned on, the radio and CD player should operate normally.

STEP 5. Measure at radio and CD player connector C-102 in order to check the battery circuit of power supply system to the radio and CD player (ignition switch ACC).

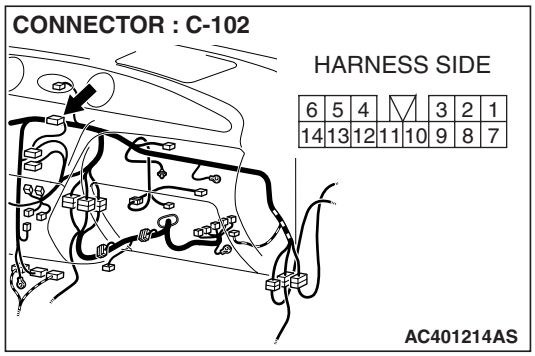

(1) Disconnect radio and CD player connector C-102, and measure at the wiring harness side.
(2) Turn the ignition switch to "ACC" position.

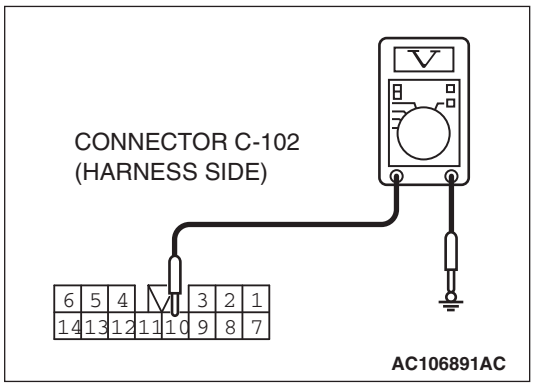

(3) Measure the voltage between terminal 10 and ground by backprobing.
- The measured value should be approximately 12 volts (battery positive voltage).

Q: Does the measured voltage correspond with this range?

YES : Go to Step 8.
NO : Go to Step 6.

STEP 6. Check radio and CD player connector C-102 for damage.

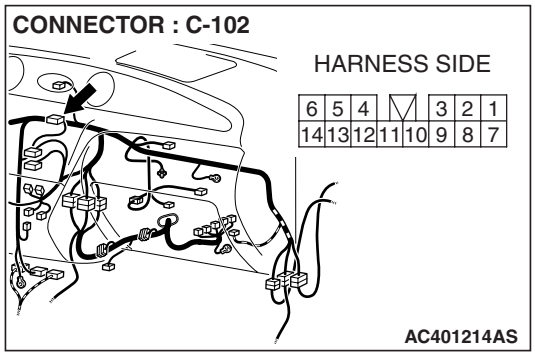

Q: Are radio and CD player connector C-102 in good condition?

YES : Go to Step 7.
NO : Repair or replace the connector. Refer to GROUP 00E, Harness Connector Inspection P.00E-2. If the power switch is turned on, the radio and CD player should operate normally.

STEP 7. Check the wiring harness between radio and CD player connector C-102 (terminal 10) and ignition switch (ACC).

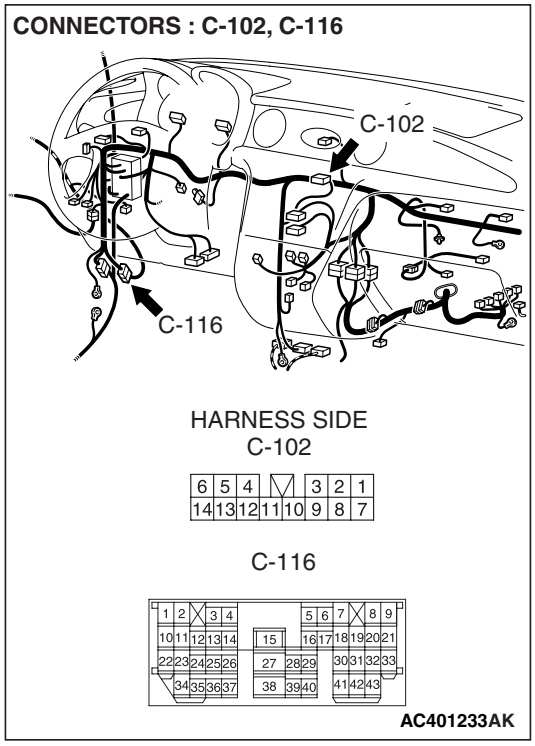

NOTE: Also check intermediate connector C-116. If intermediate connector C-116 is damaged, repair or replace the connector as described in GROUP 00E, Harness Connector Inspection P.00E-2.

Q: Are the wiring harness between radio and CD player connector C-102 (terminal 4) and ignition switch (ACC) in good condition?

YES : There is no action to be taken.

NO : Repair the wiring harness. If the power switch is turned on, the radio and CD player should operate normally.

STEP 8. Check the assembling state of the radio and CD player.

NOTE: The radio and CD player are grounded to the instrument panel center reinforcement directly.

Q: Are the radio and CD player installed correctly?

YES : Repair or replace the radio and CD player. If the power switch is turned on, the radio and CD player should operate normally.

NO : Install properly. If the power switch is turned on, the radio and CD player should operate normally.

INSPECTION PROCEDURE 2: No Sound. <Vehicles with Amplifier>

Amplifier Power Supply Circuit

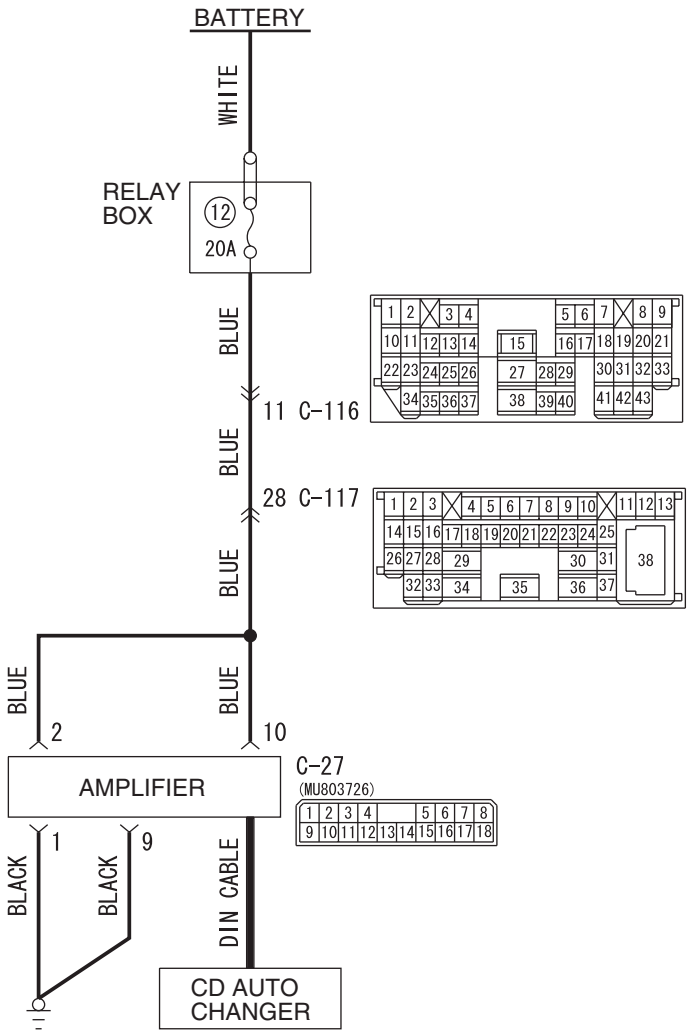

W5Z54M067A

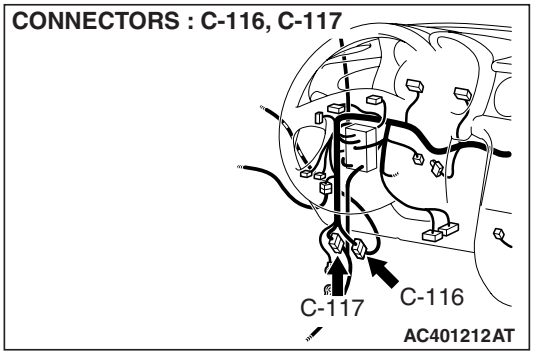

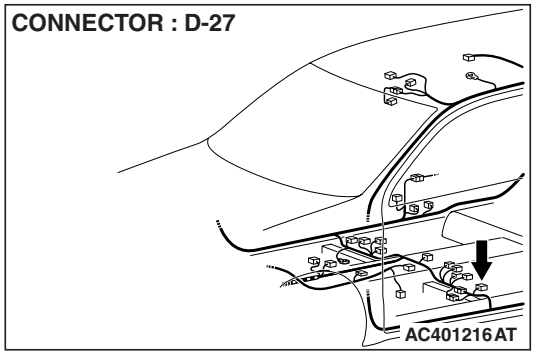

CIRCUIT OPERATION

Power is supplied to the amplifier when the battery.

TECHNICAL DESCRIPTION (COMMENT)

The cause is probably a faulty amplifier power supply circuit system.

TSB Revision

TROUBLESHOOTING HINTS

- Damaged wiring harness or connector.
- Damaged DIN cable.
- Malfunction of the amplifier.
- Malfunction of the radio and CD player.

DIAGNOSIS

Required Special Tool:

- MB991223: Harness set

STEP 1. Measure at amplifier connector D-27 by backprobing in order to check the battery circuit of power supply system to the amplifier.

(1) Measure at amplifier connector D-27 without disconnecting the connector.

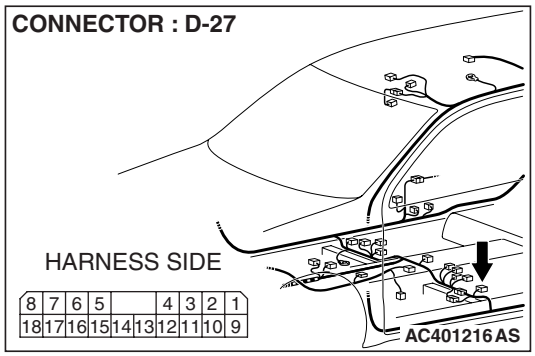

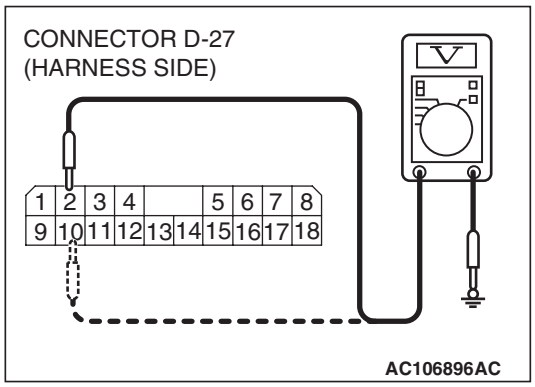

(2) Measure the voltage between terminal 2 and ground.
- The measured value should be approximately 12 volts (battery positive voltage).

(3) Measure the voltage between terminal 10 and ground.
- The measured value should be approximately 12 volts (battery positive voltage).

Q: Does the measured voltage correspond with this range?

YES : Go to Step 4.
NO : Go to Step 2.

STEP 2. Check amplifier connector D-27 for damage.

Q: Is amplifier connector D-27 in good condition?

YES : Go to Step 3.
NO : Repair or replace the connector. Refer to GROUP 00E, Harness Connector Inspection P.00E-2. The speakers should sound.

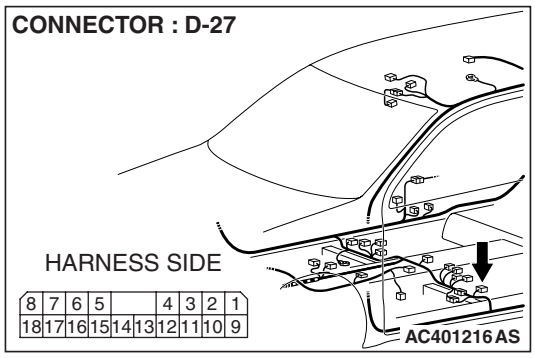

STEP 3. Check the wiring harness between amplifier connector D-27 (terminal 10 and 2)and battery.

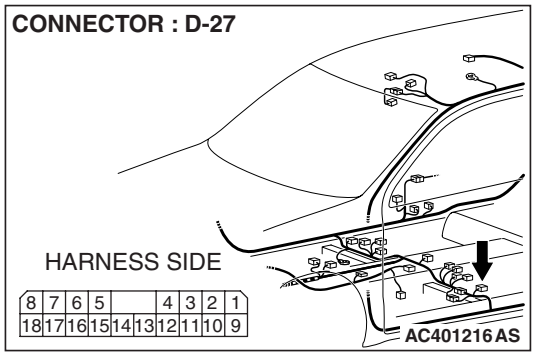

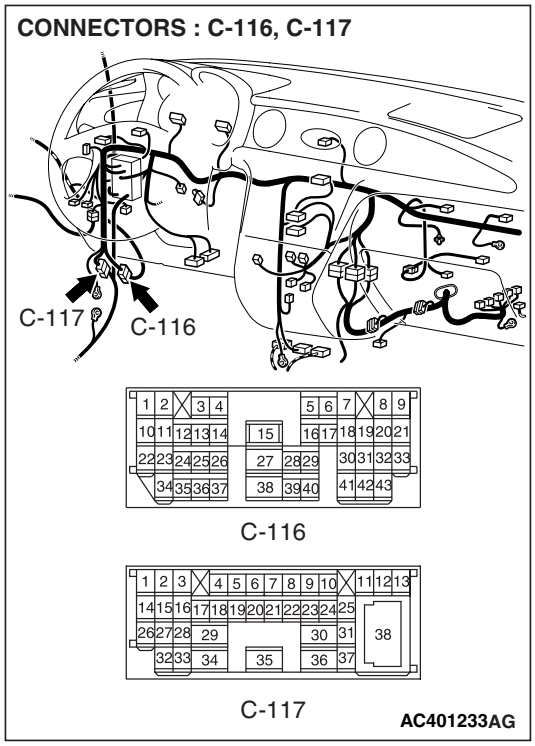

NOTE: Also check intermediate connector C-116 and C-117. If intermediate connectors C-116 or C-117 are damaged, repair or replace the connector as described in GROUP 00E, Harness Connector Inspection P.00E-2.

Q: Are the wiring harness between amplifier connector D-27 (terminal 10 and 2) and battery in good condition?

YES : There is no action to be taken.

NO : Repair the wiring harness. The speakers should sound.

STEP 4. Measure at amplifier connector D-27 by backprobing in order to check the ground circuit to the amplifier.

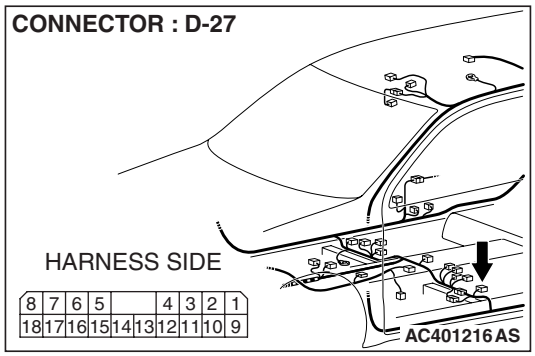

(1) Measure at amplifier connector D-27 without disconnecting the connector.

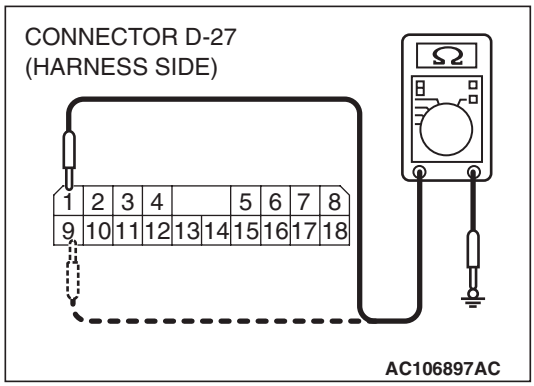

(2) Measure the resistance between terminal 1 and ground by backprobing.
- The measured value should be 2 ohms or less.

(3) Measure the resistance between terminal 9 and ground by backprobing.
- The measured value should be 2 ohms or less.

Q: Does the measured resistance value correspond with this range?

YES : Go to Step 7.
NO : Go to Step 5.

STEP 5. Check amplifier connector D-27 for damage.

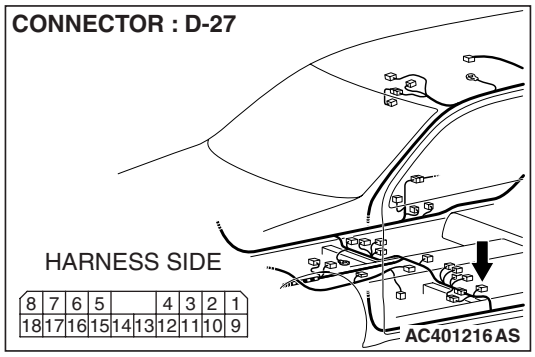

Q: Is amplifier connector D-27 in good condition?

YES : Go to Step 6.
NO : Repair or replace the connector. Refer to GROUP 00E, Harness Connector Inspection P.00E-2. The speakers should sound.

STEP 6. Check the wiring harness between amplifier connector D-27 (terminal 1 and 9) and ground.

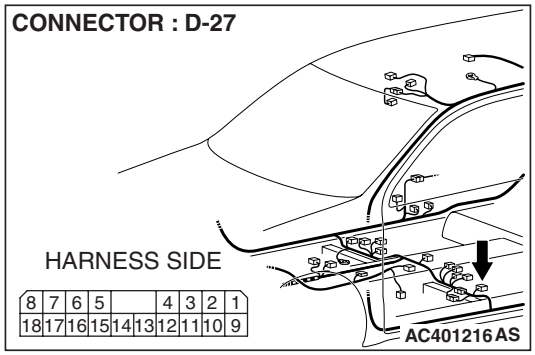

Q: Are the wiring harness between amplifier connector D-27 (terminal 1 and 9) and ground in good condition?

YES : There is no action to be taken.
NO : Repair the wiring harness. The speakers should sound.

STEP 7. Check the DIN cable between amplifier and radio and CD player.

Q: Are the DIN cable in good condition?

YES : Go to Step 8.

NO : Repair or replace the DIN cable. The speakers should sound.

STEP 8. Replace the radio and CD player.

Q: Is sound output normally from all the speakers?

YES : There is no action to be taken.

NO : Repair or replace the amplifier. The speakers should sound.

INSPECTION PROCEDURE 3: No Sound from One Speaker. <Vehicles without amplifier>

Speaker System Circuit <without Amplifier>

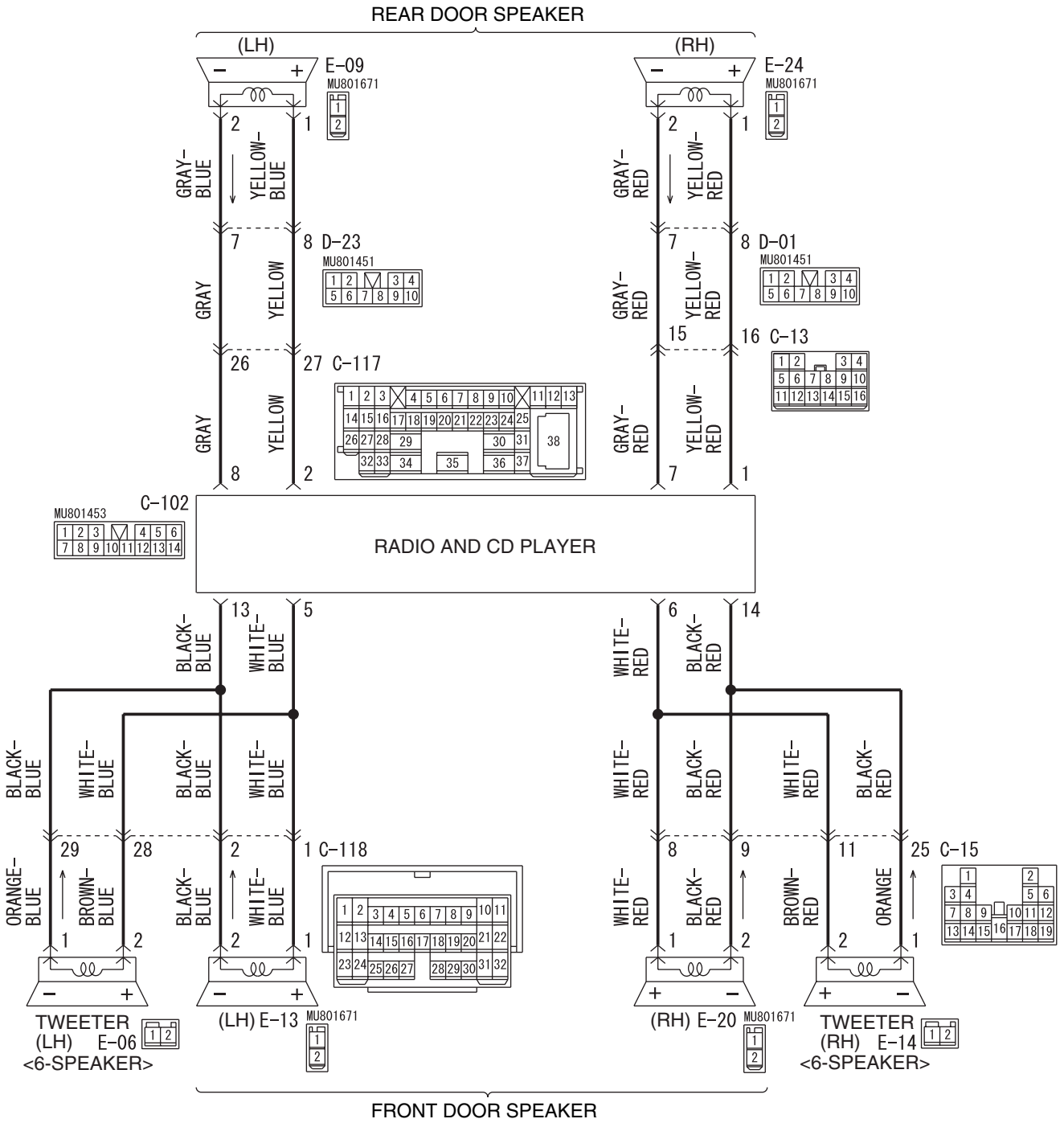

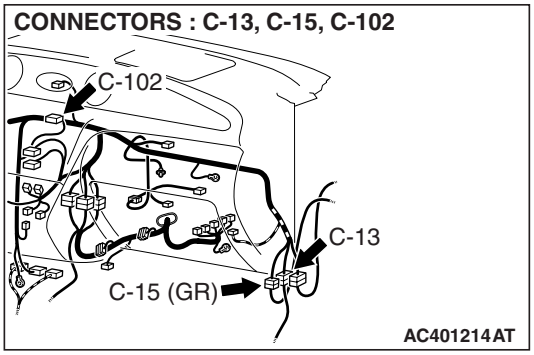

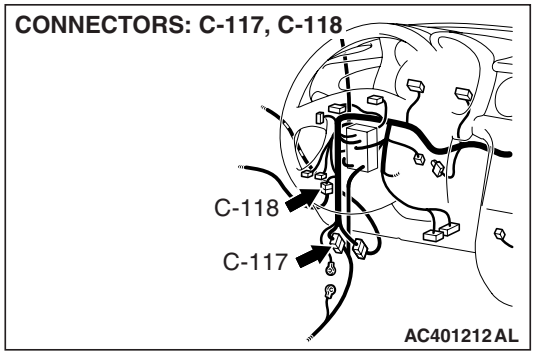

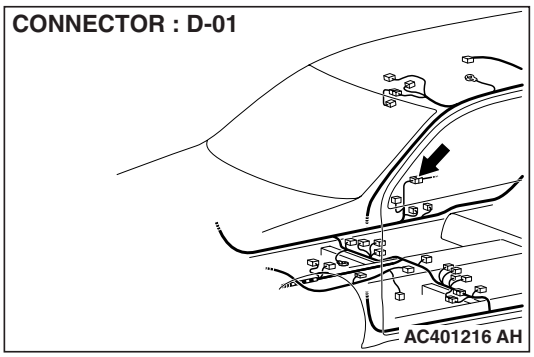

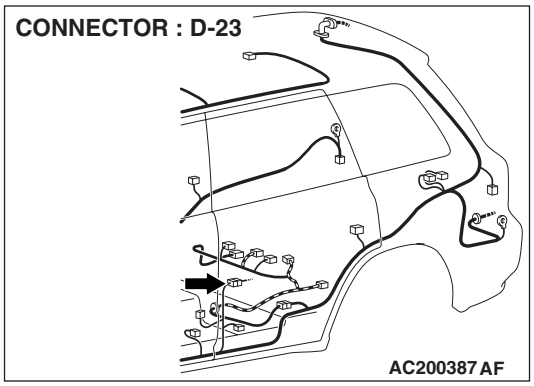

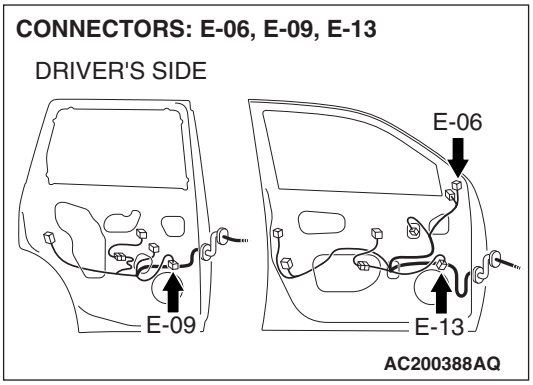

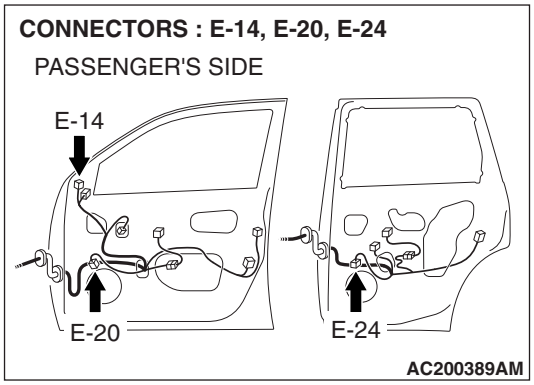

CIRCUIT OPERATION

The sound is heard from the door speaker and tweeter according to audio signal output from the radio and CD player.

TECHNICAL DESCRIPTION (COMMENT)

The cause is probably a faulty door speaker and tweeter circuit system.

TROUBLESHOOTING HINTS

- Malfunction of the door speaker.
- Malfunction of the tweeter <6-speaker>.
- Damaged wiring harness or connector.
- Malfunction of the radio and CD player.

DIAGNOSIS

STEP 1. Check to see which door speaker or tweeter the sound is not output from.

Use the speaker test to determine which door speaker or tweeter does not sound.

Q: Which door speaker or tweeter is not working?

Front door speaker (LH) : Go to Step 2.
Front door speaker (RH) : Go to Step 5.
Rear door speaker (LH) : Go to Step 8.
Rear door speaker (RH) : Go to Step 11.
Tweeter (LH) <6-speaker> : Go to Step 14.
Tweeter (RH) <6-speaker> : Go to Step 17.

STEP 2. Check the front door speaker (LH).

(1) Remove the front door speaker (LH). Refer to P.54A-180.
(2) Check that the front door speaker (LH) generates noise when a five-volt voltage is applied on the front door speaker (LH) terminal.

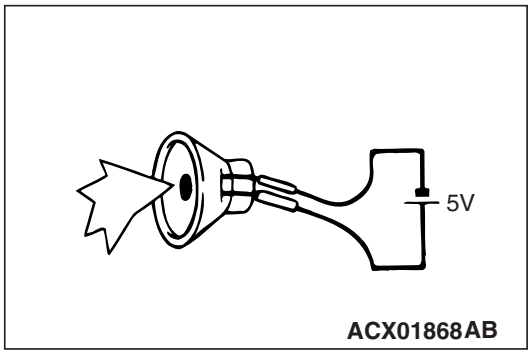

Q: Is the front door speaker (LH) generating noise?

YES : Go to Step 3.
NO : Replace the front door speaker (LH). The front door speaker (LH) should sound.

STEP 3. Check front door speaker (LH) connector E-13 and radio and CD player connector C-102 for damage.

Q: Are harness connectors E-13 and C-102 in good condition?

YES : Go to Step 4.
NO : Repair or replace the connector. Refer to GROUP 00E, Harness Connector Inspection P.00E-2. The door speaker (LH) should sound.

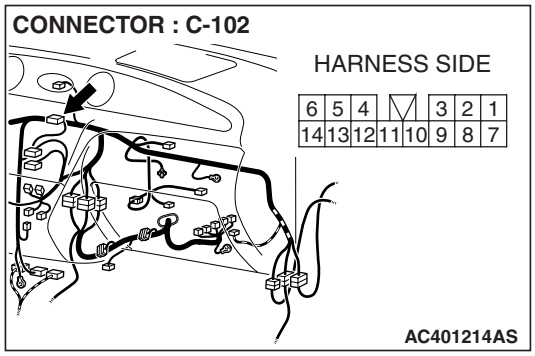

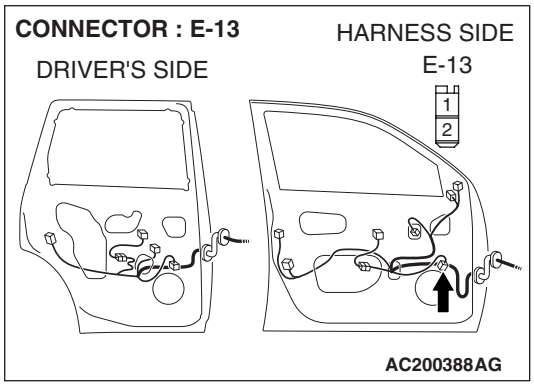

STEP 4. Check the wiring harness between front door speaker (LH) connector E-13 (terminal 1 and 2) and radio and CD player connector C-102 (terminal 5 and 13).

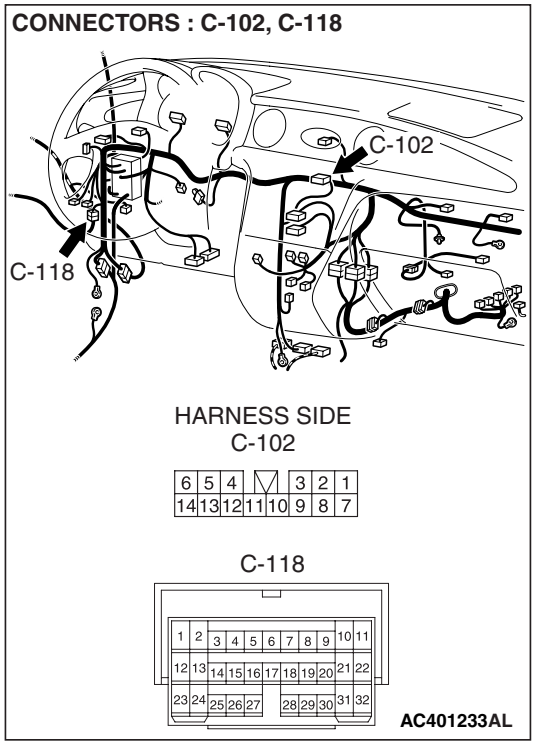

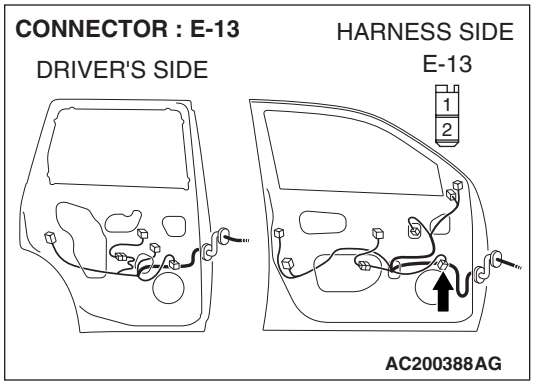

NOTE: Also check intermediate connector C-118. If intermediate connector C-118 is damaged, repair or replace the connector as described in GROUP 00E, Harness Connector Inspection P.00E-2.

Q: Are the wiring harness between front door speaker (LH) connector E-13 (terminal 1 and 2) and radio and CD player connector C-102 (terminal 5 and 13) in good condition?

YES : Repair or replace the radio and CD player. The front door speaker (LH) should sound.

NO : Repair the wiring harness. The front door speaker (LH) should sound.

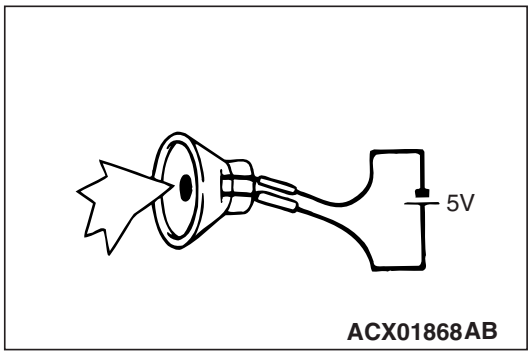

STEP 5. Check the front door speaker (RH).

(1) Remove the front door speaker (RH). Refer to P.54A-180.

(2) Check that the front door speaker (RH) generates noise when a five-volt voltage is applied on the front door speaker (RH) terminal.

Q: Is the front door speaker (RH) generating noise?

YES : Go to Step 6.

NO : Replace the front door speaker (RH). The front door speaker (RH) should sound.

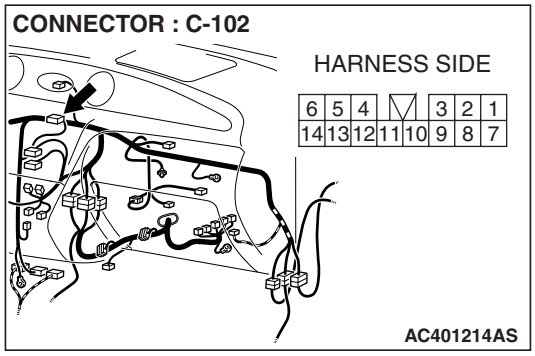

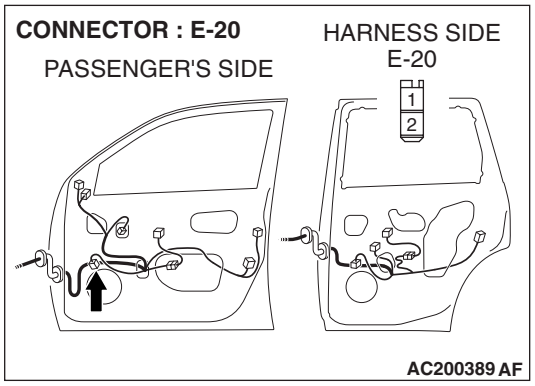

STEP 6. Check front door speaker (RH) connector E-20 and radio and CD player connector C-102 for damage.

Q: Are harness connectors E-20 and C-102 in good condition?

YES : Go to Step 7.

NO : Repair or replace the connector. Refer to GROUP 00E, Harness Connector Inspection P.00E-2. The front door speaker (RH) should sound.

STEP 7. Check the wiring harness between front door speaker (RH) connector E-20 (terminal 1 and 2) and radio and CD player connector C-102 (terminal 6 and 14).

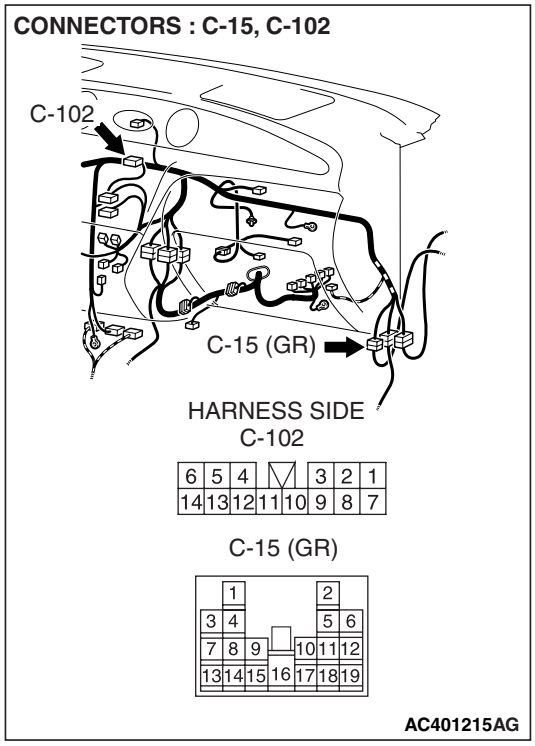

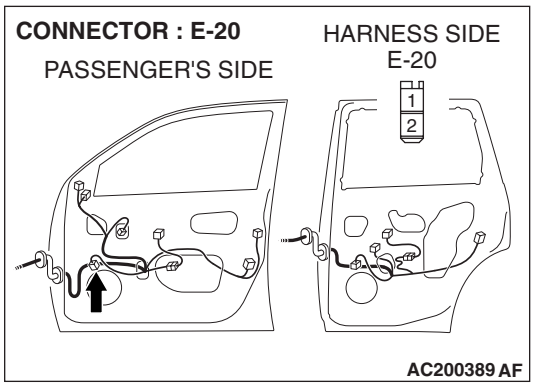

NOTE: Also check intermediate connector C-15. If intermediate connector C-15 is damaged, repair or replace the connector as described in GROUP 00E, Harness Connector Inspection *P.00E-2.*

Q: Are the wiring harness between front door speaker (RH) connector E-20 (terminal 1 and 2) and radio and CD player connector C-102 (terminal 6 and 14) in good condition?

YES : Repair or replace the radio and CD player. The front door speaker (RH) should sound.

NO : Repair the wiring harness. The front door speaker (RH) should sound.

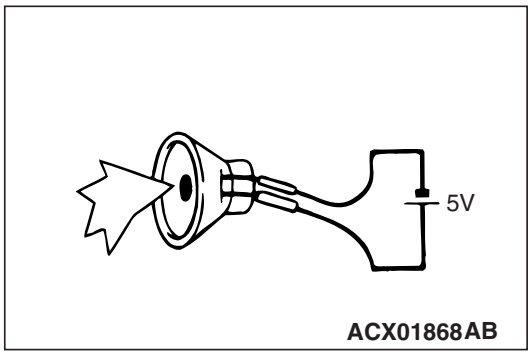

STEP 8. Check the rear door speaker (LH).

(1) Remove the rear door speaker (LH). Refer to P.54A-180.

(2) Check that the rear door speaker (LH) generates noise when a five-volt voltage is applied on the rear door speaker (LH) terminal.

Q: Is the rear door speaker (LH) generating noise?

YES : Go to Step 9.

NO : Replace the rear door speaker (LH). The rear door speaker (LH) should sound.

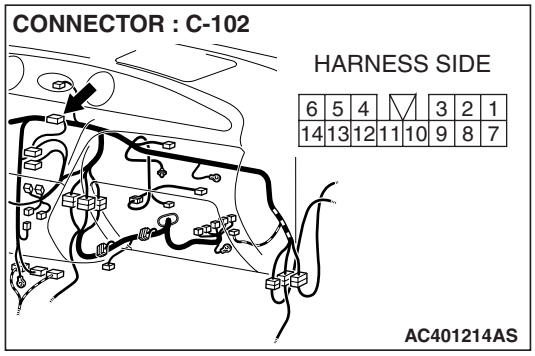

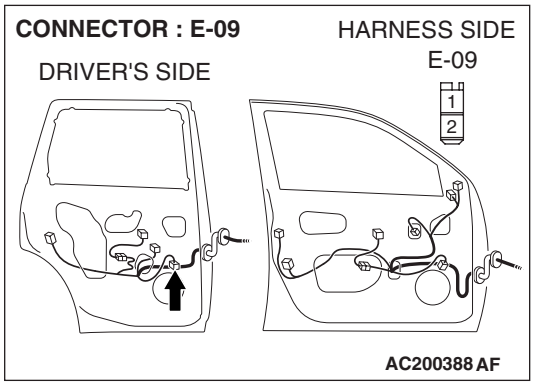

STEP 9. Check rear door speaker (LH) connector E-09 and radio and CD player connector C-102 for damage.

Q: Are harness connectors E-09 and C-102 in good condition?

YES : Go to Step 10.

NO : Repair or replace the connector. Refer to GROUP 00E, Harness Connector Inspection P.00E-2. The rear door speaker (LH) should sound.

STEP 10. Check the wiring harness between rear door speaker (LH) connector E-09 (terminal 1 and 2) and radio and CD player connector C-102 (terminal 2 and 8).

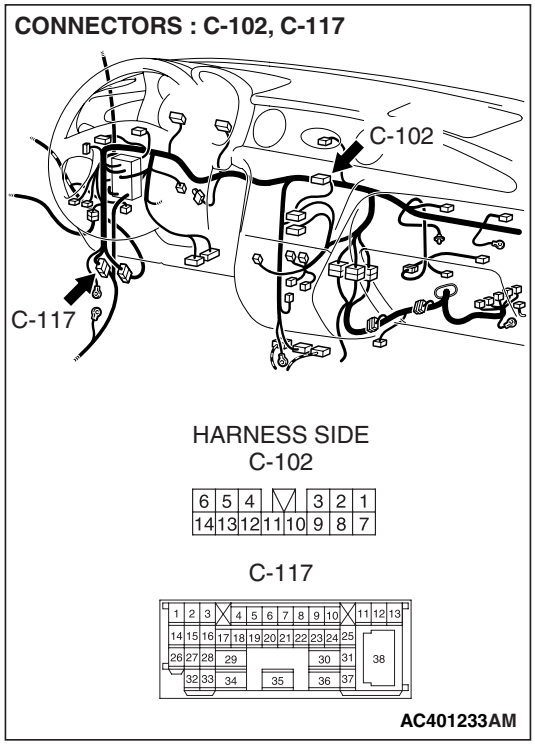

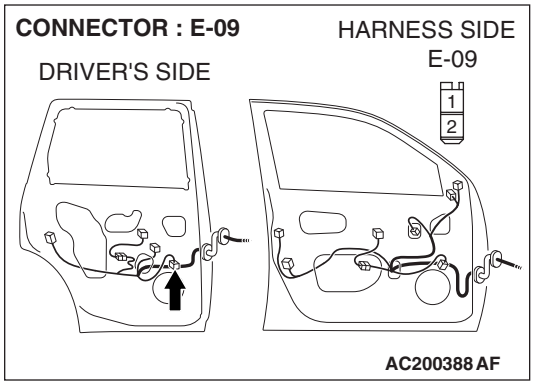

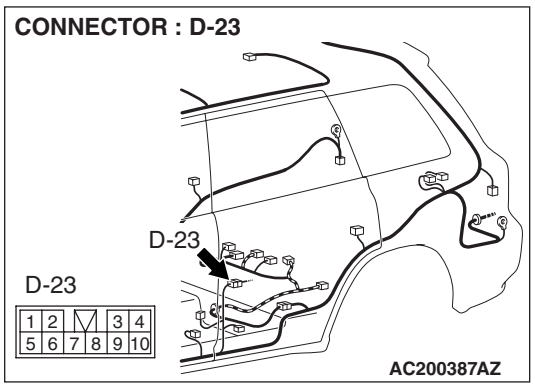

NOTE: Also check intermediate connector C-117 and D-23. If intermediate connector C-117 or D-23 are damaged, repair or replace the connector as described in GROUP 00E, Harness Connector Inspection P.00E-2.

Q: Are the wiring harness between the rear door speaker (LH) connector E-09 (terminal 1 and 2) and radio and CD player connector C-102 (terminal 2 and 8) in good condition?

YES : Repair or replace the radio and CD player. The rear door speaker (LH) should sound.

NO : Repair the wiring harness. The rear door speaker (LH) should sound.

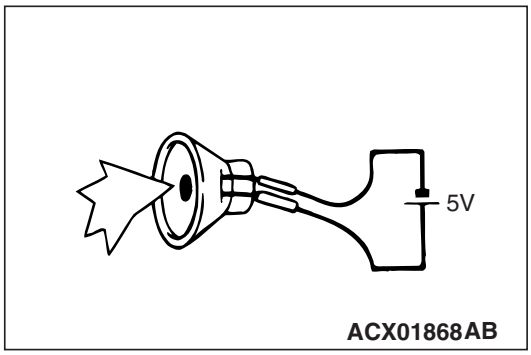

STEP 11. Check the rear door speaker (RH).

(1) Remove the rear door speaker (RH). Refer to P.54A-180.

(2) Check that the rear door speaker (RH) generates noise when a five-volt voltage is applied on the rear door speaker (RH) terminal.

Q: Is the rear door speaker (RH) generating noise?

YES : Go to Step 12.

NO : Replace the rear door speaker (RH). The rear door speaker (RH) should sound.

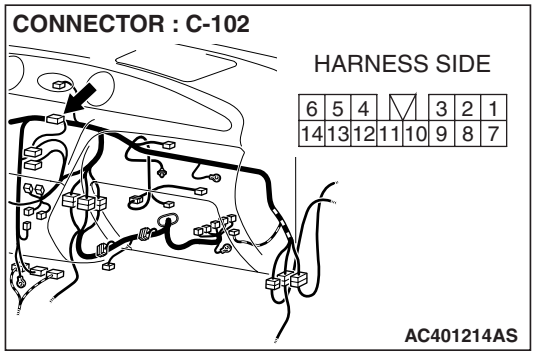

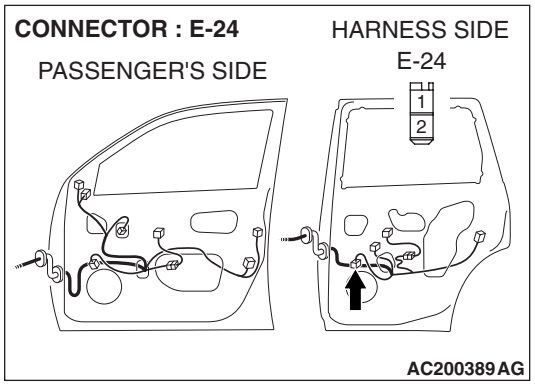

STEP 12. Check rear door speaker (RH) connector E-24 and radio and CD player connector C-102 for damage.

Q: Are harness connectors E-24 and C-102 in good condition?

YES : Go to Step 13.

NO : Repair or replace the connector. Refer to GROUP 00E, Harness Connector Inspection P.00E-2. The rear door speaker (RH) should sound.

STEP 13. Check the wiring harness between rear door speaker (RH) connector E-24 (terminal 1 and 2) and radio and CD player connector C-102 (terminal 1 and 7).

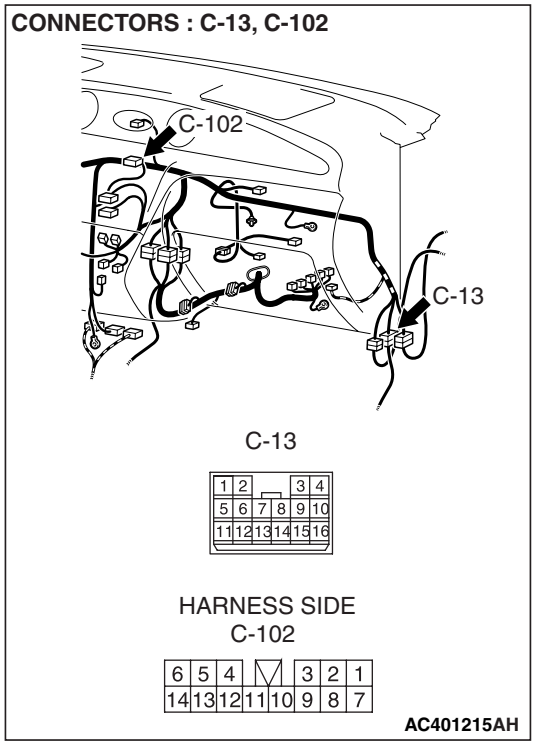

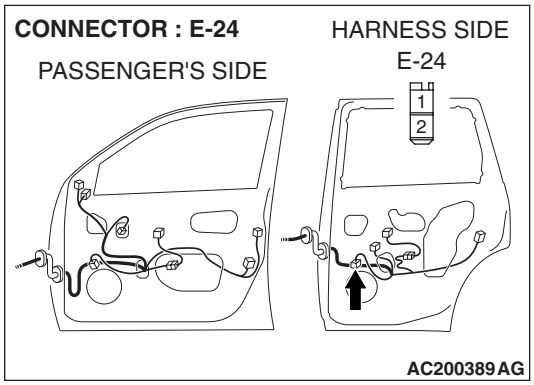

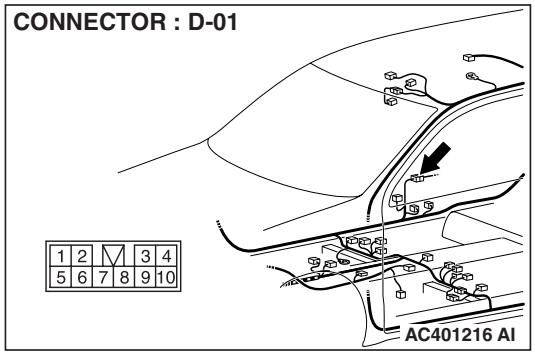

NOTE: Also check intermediate connector C-13 and D-01. If intermediate connector C-13 or D-01 are damaged, repair or replace the connector as described in GROUP 00E, Harness Connector Inspection P.00E-2.

Q: Are the wiring harness between rear door speaker (RH) connector E-24 (terminal 1 and 2) and radio and CD player connector C-102 (terminal 1 and 7) in good condition?

YES : Repair or replace the radio and CD player. The rear door speaker (RH) should sound.

NO : Repair the wiring harness. The rear door speaker (RH) should sound.

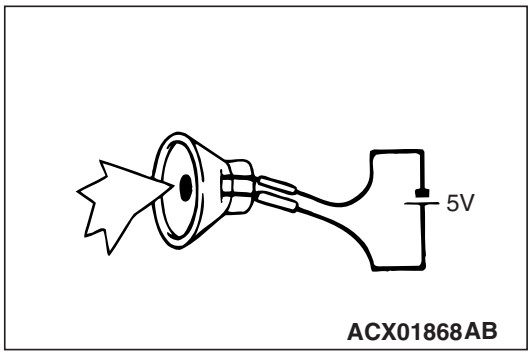

STEP 14. Check the tweeter (LH).

(1) Remove the tweeter (LH). Refer to P.54A-180.

(2) Check that the tweeter (LH) generates noise when a five-volt voltage is applied on the tweeter (LH) terminal.

Q: Is the tweeter (LH) generating noise?

YES : Go to Step 15.

NO : Replace the tweeter (LH). The tweeter (LH) should sound.

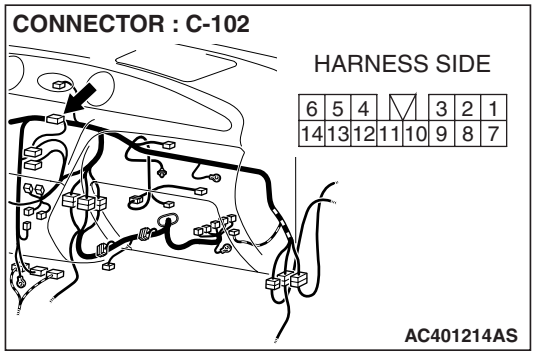

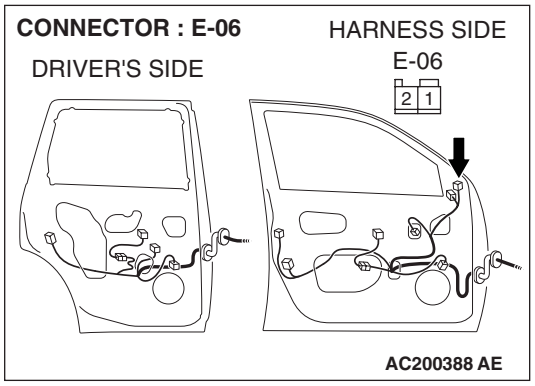

STEP 15. Check tweeter (LH) connector E-06 and radio and CD player connector C-102 for damage.

Q: Are harness connectors E-06 and C-102 in good condition?

YES : Go to Step 16.

NO : Repair or replace the connector. Refer to GROUP 00E, Harness Connector Inspection P.00E-2. The door speaker (LH) should sound.

STEP 16. Check the wiring harness between tweeter (LH) connector E-06 (terminal 1 and 2) and radio and CD player connector C-102 (terminal 13 and 5).

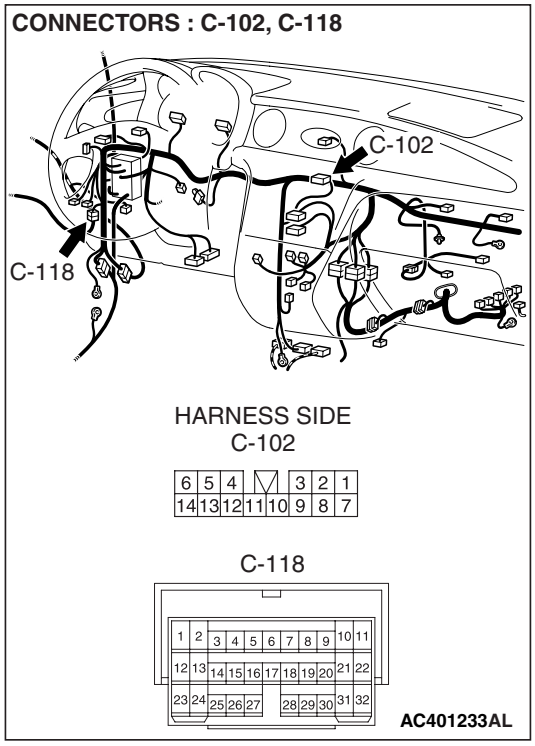

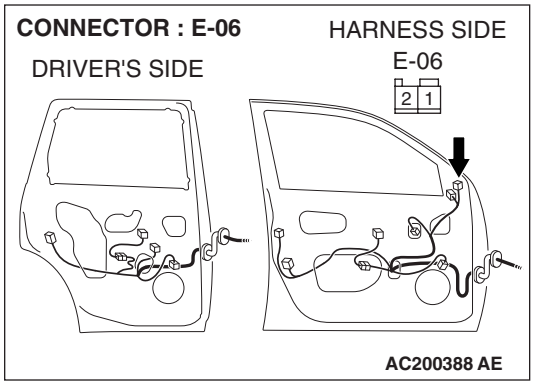

NOTE: Also check intermediate connector C-118. If intermediate connector C-118 is damaged, repair or replace the connector as described in GROUP 00E, Harness Connector Inspection P.00E-2.

Q: Are the wiring harness between tweeter (LH) connector E-06 (terminal 1 and 2) and radio and CD player connector C-102 (terminal 13 and 5) in good condition?

YES : Repair or replace the radio and CD player. The tweeter (LH) should sound.

NO : Repair the wiring harness. The tweeter (LH) should sound.

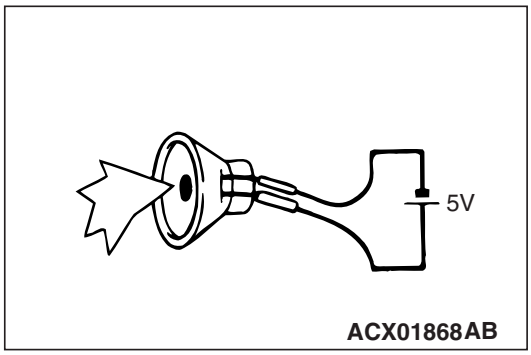

STEP 17. Check the tweeter (RH).

(1) Remove the tweeter (RH). Refer to P.54A-180.

(2) Check that the tweeter (RH) generates noise when a five-volt voltage is applied on the tweeter (RH) terminal.

Q: Is the tweeter (RH) generating noise?

YES : Go to Step 18.

NO : Replace the tweeter (RH). The tweeter (RH) should sound.

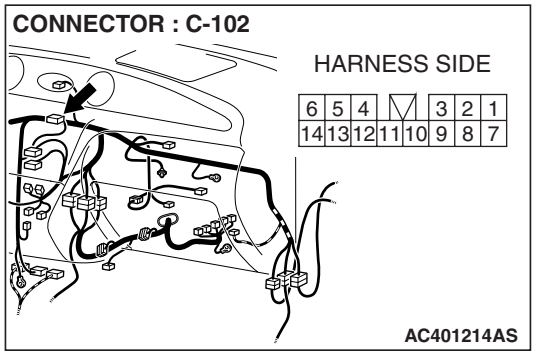

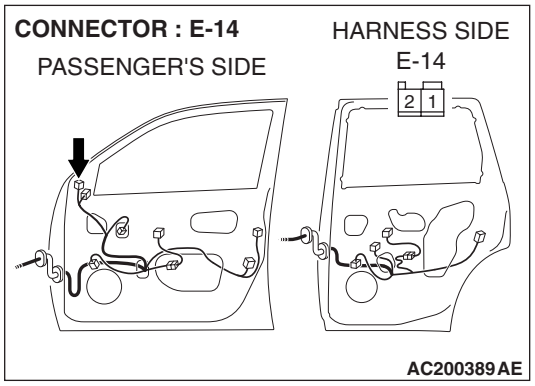

STEP 18. Check tweeter (RH) connector E-14 and radio and CD player connector C-102 for damage.

Q: Are harness connectors E-14 and C-102 in good condition?

YES : Go to Step 19.

NO : Repair or replace the connector. Refer to GROUP 00E, Harness Connector Inspection P.00E-2. The tweeter (RH) should sound.

STEP 19. Check the wiring harness between tweeter (RH) connector E-14 (terminal 1 and 2) and radio and CD player connector C-102 (terminal 14 and 6).

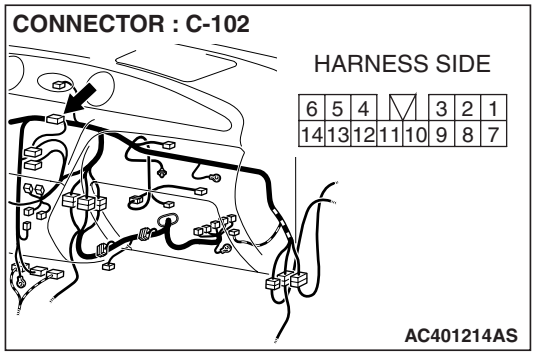

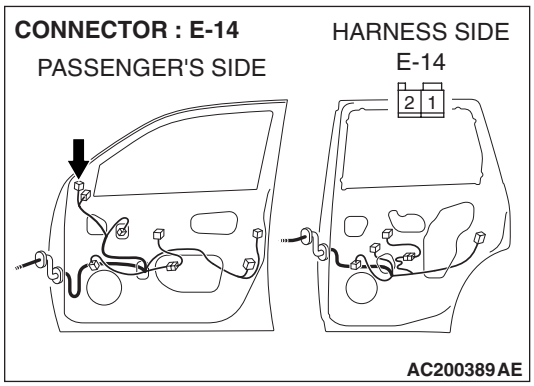

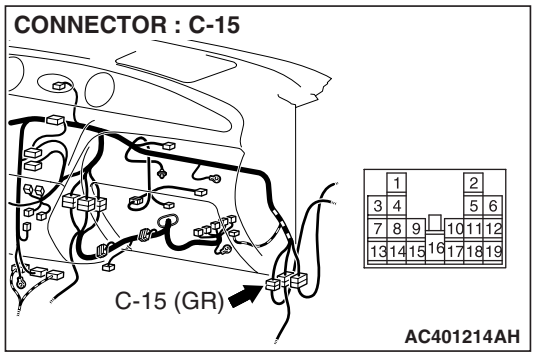

NOTE: Also check intermediate connector C-15. If intermediate connector C-15 is damaged, repair or replace the connector as described in GROUP 00E, Harness Connector Inspection P.00E-2.

Q: Are the wiring harness between tweeter (RH) connector E-14 (terminal 1 and 2) and radio and CD player connector C-102 (terminal 14 and 6) in good condition?

YES : Repair or replace the radio and CD player. The tweeter (RH) should sound.

NO : Repair the wiring harness. The tweeter (RH) should sound.

INSPECTION PROCEDURE 4: No Sound from One Speaker. <vehicles with amplifier>

Speaker System Circuit <with Amplifier>

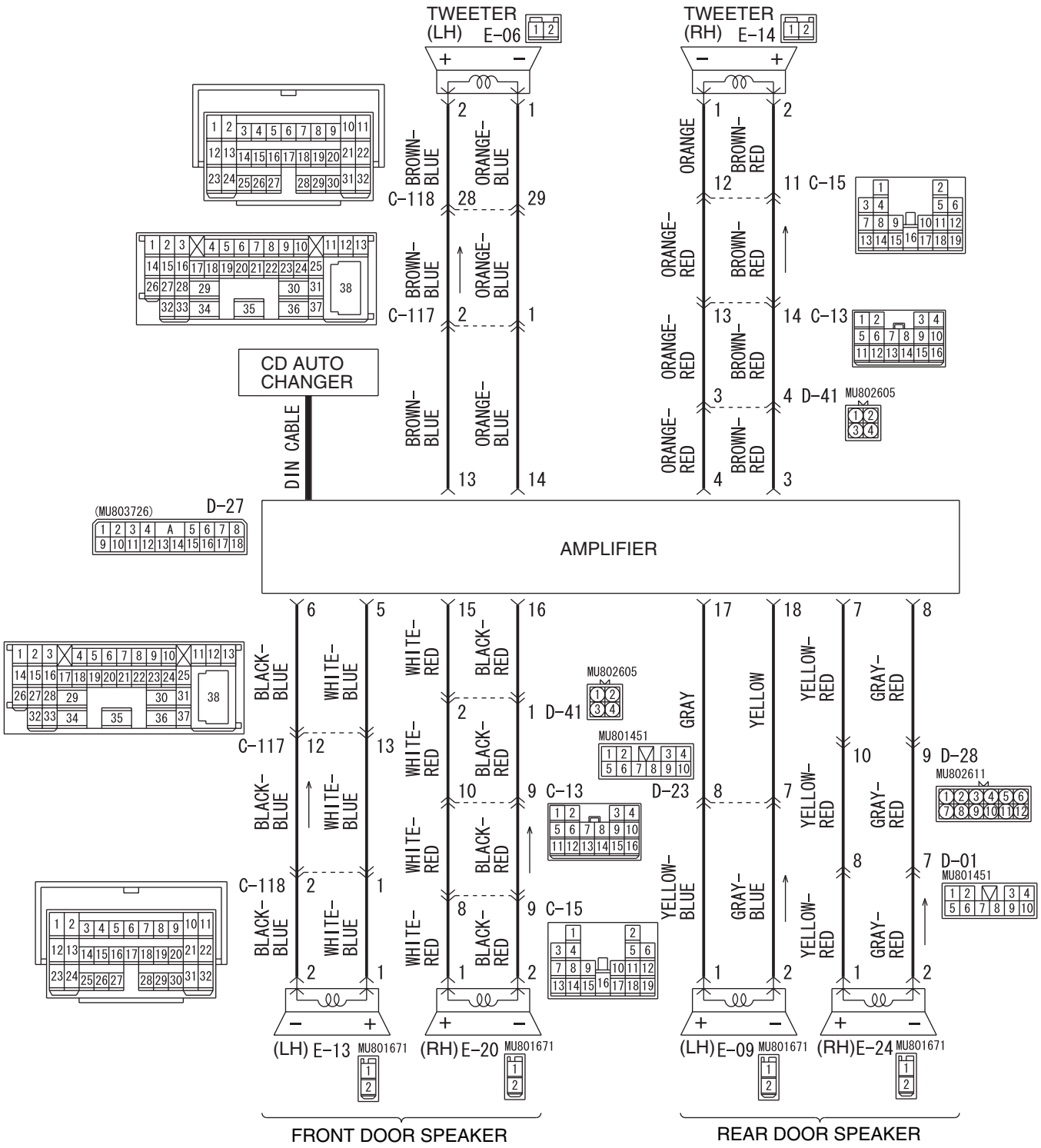

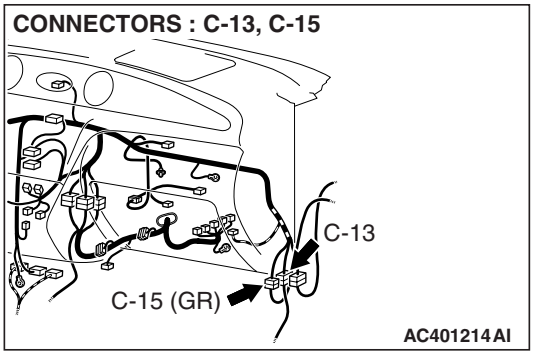

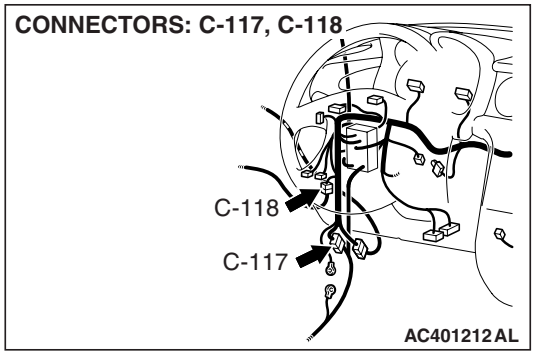

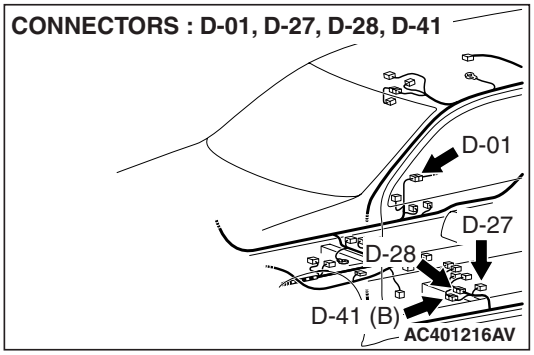

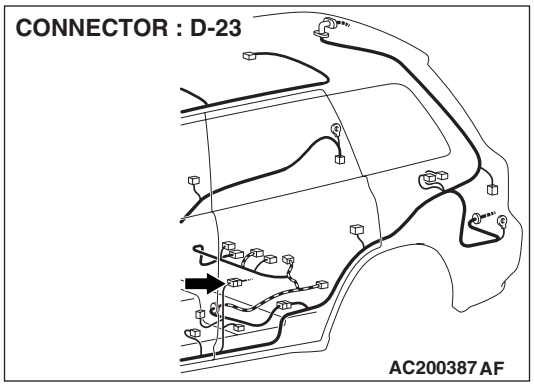

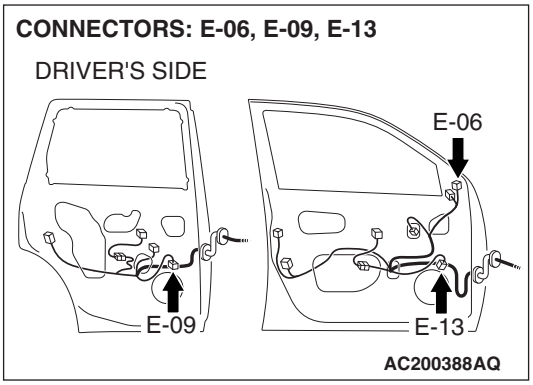

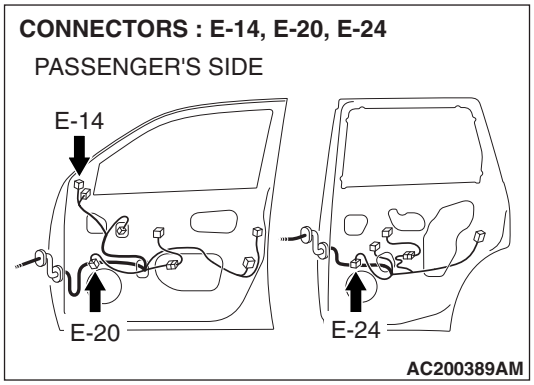

CIRCUIT OPERATION

- The sound signals are sent from the radio and CD player into the amplifier. After the signals are amplified and filtered, the sound signals are sent to the door speaker.

TECHNICAL DESCRIPTION (COMMENT)

The cause is probably a faulty door speaker circuit system.

TROUBLESHOOTING HINTS

- Malfunction of the door speaker.
- Malfunction of the tweeter.
- Damaged wiring harness or connector.
- Malfunction of the radio and CD player.
- Malfunction of the amplifier.

DIAGNOSIS

STEP 1. Check to see which door speaker or tweeter the sound is not output from.

Use the speaker test to determine which door speaker does not sound.

Q: Which door speaker is not working?

Front door speaker (LH) : Go to Step 2.
Front door speaker (RH) : Go to Step 6.
Rear door speaker (LH) : Go to Step 10.
Rear door speaker (RH) : Go to Step 14.
Tweeter (LH) : Go to Step 18.
Tweeter (RH) : Go to Step 22.

STEP 2. Check the front door speaker (LH).

(1) Remove the front door speaker (LH). Refer to P.54A-180.
(2) Check that the front door speaker (LH) generates noise when a five-volt voltage is applied on the front door speaker (LH) terminal.

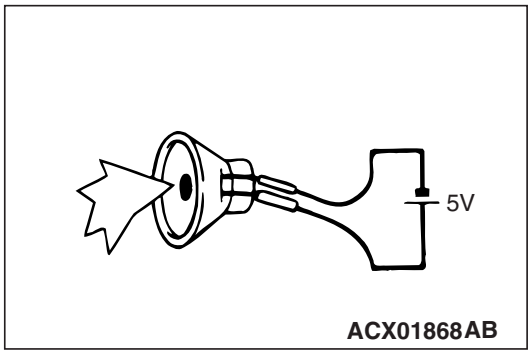

Q: Is the front door speaker (LH) generating noise?

YES : Go to Step 3.
NO : Replace the front door speaker (LH). The front door speaker (LH) should sound.

STEP 3. Check front door speaker (LH) connector E-13 and amplifier connector D-27 for damage.

Q: Are front door speaker (LH) connector E-13 and amplifier connector D-27 in good condition?

YES : Go to Step 4.
NO : Repair or replace the connector. Refer to GROUP 00E, Harness Connector Inspection P.00E-2. The front door speaker (LH) should sound.

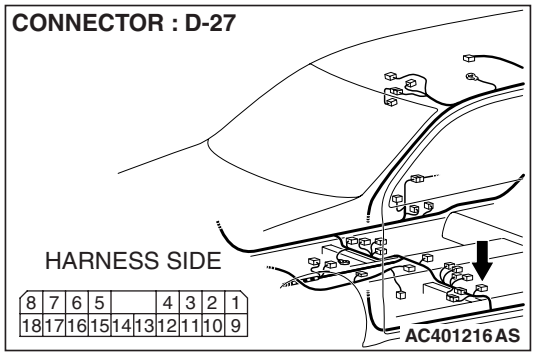

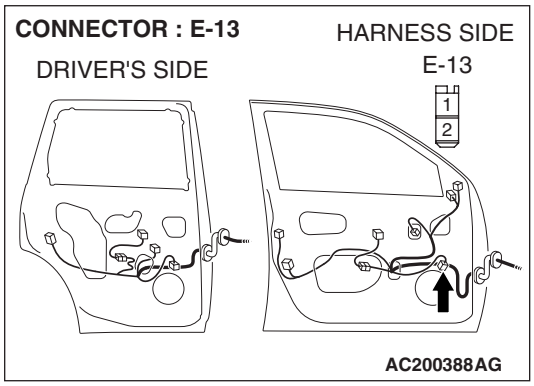

STEP 4. Check the wiring harness between front door speaker (LH) connector E-13 (terminal 1 and 2) and amplifier connector D-27 (terminal 5 and 6).

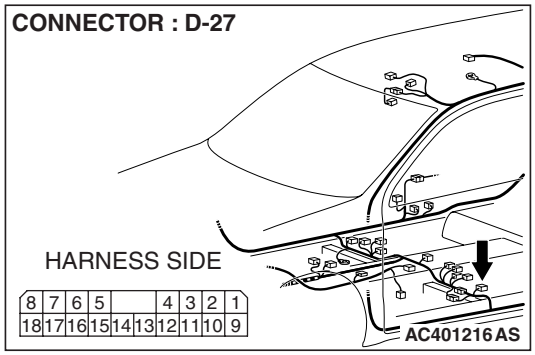

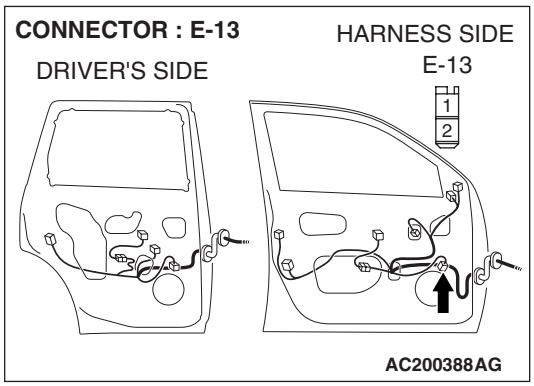

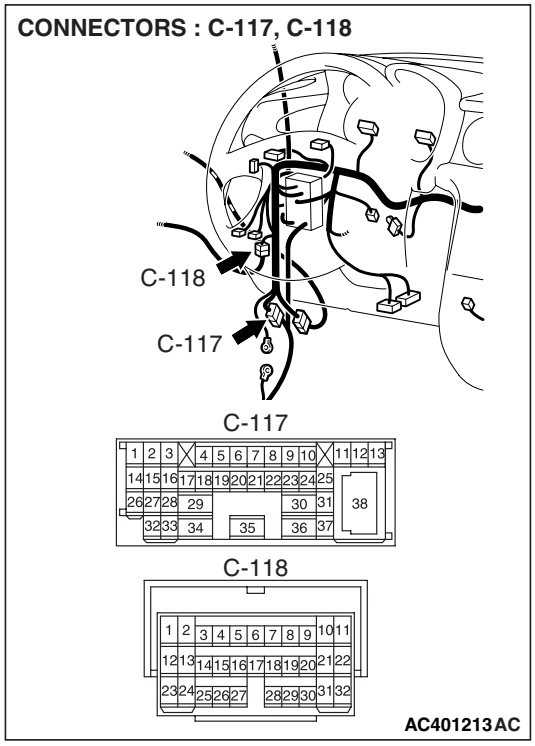

NOTE: Also check intermediate connector C-117 and C-118. If intermediate connector C-117 or C-118 are damaged, repair or replace the connector as described in GROUP 00E, Harness Connector Inspection P.00E-2.

Q: Are the wiring harness between front door speaker (LH) connector E-13 (terminal 1 and 2) and amplifier connector D-27 (terminal 5 and 6) in good condition?

YES : Go to Step 5.

NO : Repair the wiring harness. The front door speaker (LH) should sound.

STEP 5. Replace the radio and CD player.

Q: Is sound output normally from the speakers?

YES : There is no action to be taken.

NO : Repair or replace the amplifier. The front door speaker (LH) should sound.

STEP 6. Check the front door speaker (RH).

(1) Remove the front door speaker (RH). Refer to P.54A-180.

(2) Check that the front door speaker (RH) generates noise when a five-volt voltage is applied on the front door speaker (RH) terminal.

Q: Is the front door speaker (RH) generating noise?

YES : Go to Step 7.

NO : Replace the front door speaker (RH). The front door speaker (RH) should sound.

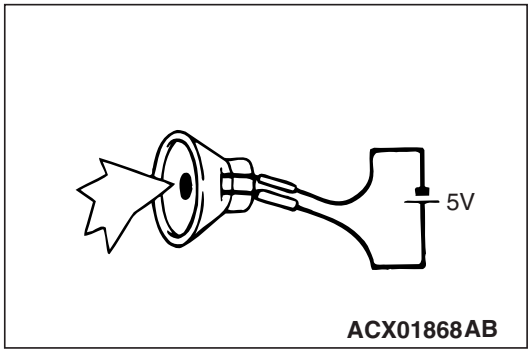

STEP 7. Check front door speaker (RH) connector E-20 and amplifier connector D-27 for damage.

Q: Are front door speaker (RH) connector E-20 and amplifier connector D-27 in good condition?

YES : Go to Step 8.

NO : Repair or replace the connector. Refer to GROUP 00E, Harness Connector Inspection P.00E-2. The front door speaker (RH) should sound.

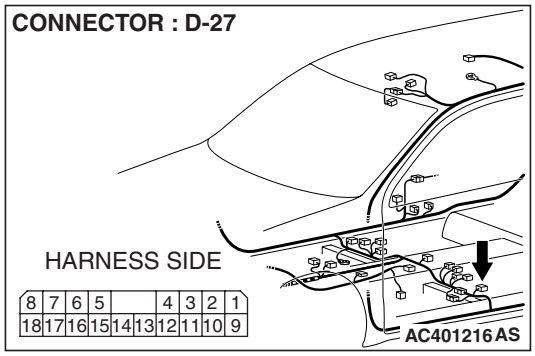

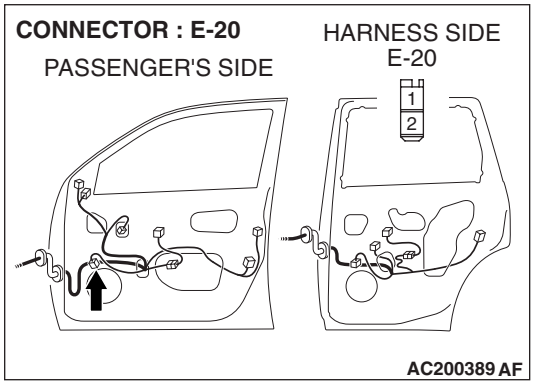

STEP 8. Check the wiring harness between front door speaker (RH) connector E-20 (terminal 1 and 2) and amplifier connector D-27 (terminal 15 and 16).

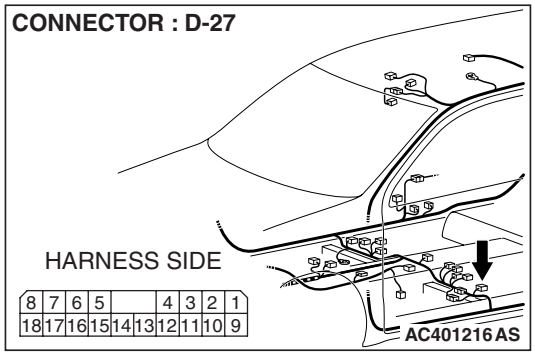

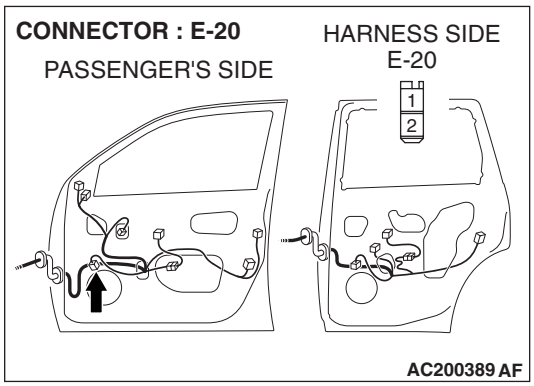

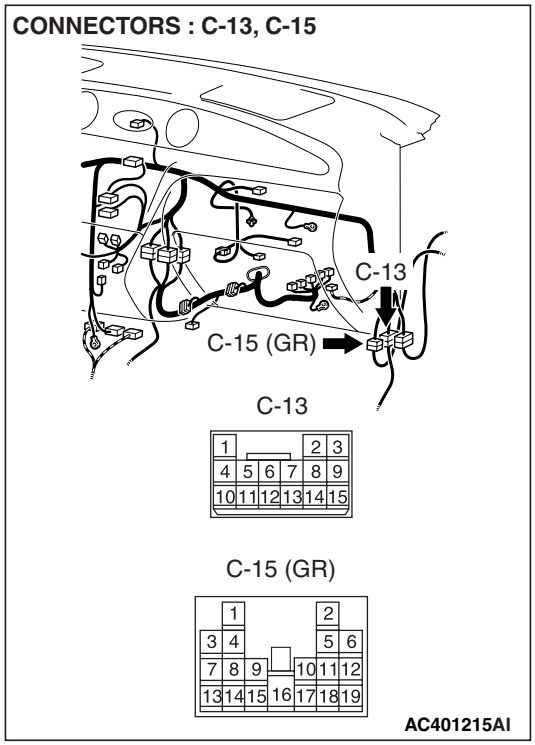

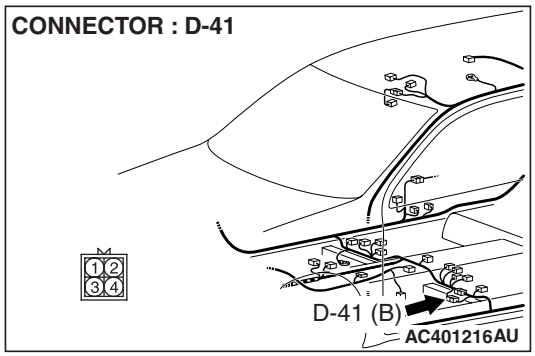

NOTE: Also check intermediate connector C-13, C-15 and D-41. If intermediate connector C-13, C-15 or D-41 are damaged, repair or replace the connector as described in GROUP 00E, Harness Connector Inspection P.00E-2.

Q: Are the wiring harness between front door speaker (RH) connector E-20 (terminal 1 and 2) and amplifier connector D-27 (terminal 15 and 16) in good condition?

YES : Go to Step 9.

NO : Repair the wiring harness. The front door speaker (RH) should sound.

STEP 9. Replace the radio and CD player.

Q: Is sound output normally from the speakers?

YES : There is no action to be taken.

NO : Repair or replace the amplifier. The front door speaker (RH) should sound.

STEP 10. Check the rear door speaker (LH).

(1) Remove the rear door speaker (LH). Refer to P.54A-180.

(2) Check that the rear door speaker (LH) generates noise when a five-volt voltage is applied on the rear door speaker (LH) terminal.

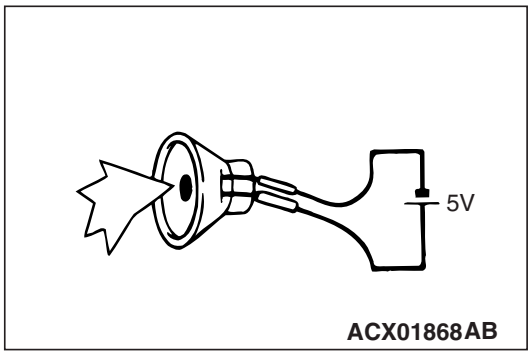

Q: Is the rear door speaker (LH) generating noise?

YES : Go to Step 11.

NO : Replace the rear door speaker (LH). The rear door speaker (LH) should sound.

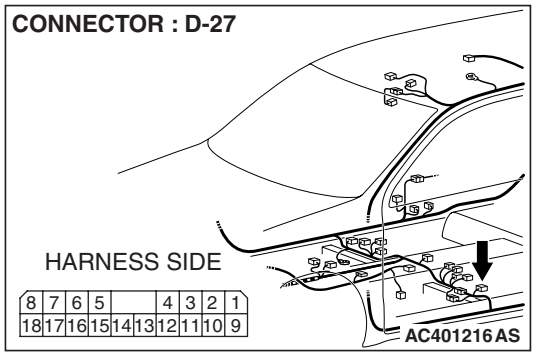

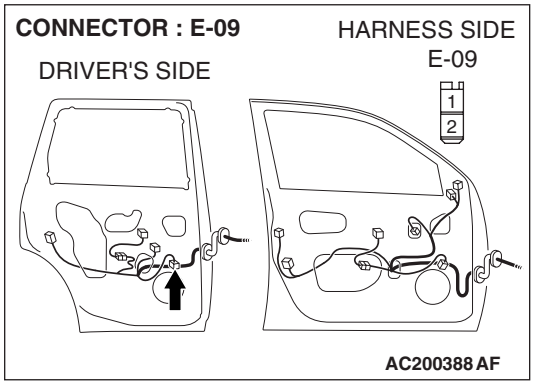

STEP 11. Check rear door speaker (LH) connector E-09 and amplifier connector D-27 for damage.

Q: Are rear door speaker (LH) connector E-09 and amplifier connector D-27 in good condition

YES : Go to Step 12.

NO : Repair or replace the connector. Refer to GROUP 00E, Harness Connector Inspection P.00E-2. The rear door speaker (LH) should sound.

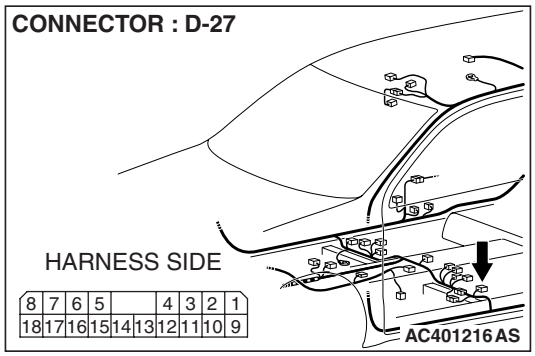

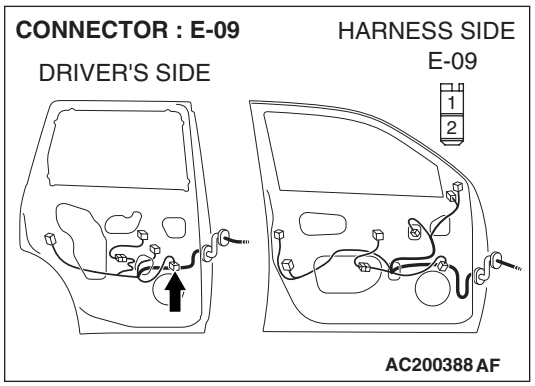

STEP 12. Check the wiring harness between rear door speaker (LH) connector E-09 (terminal 1 and 2) and amplifier connector D-27 (terminal 17 and 18).

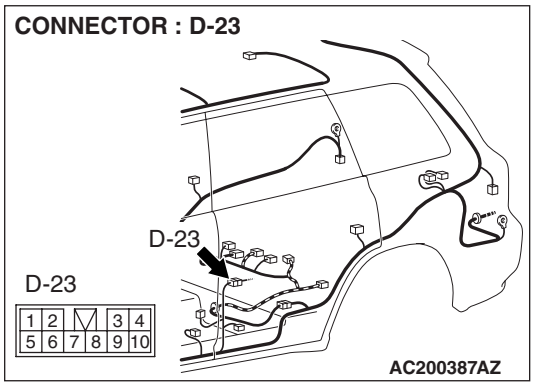

NOTE: Also check intermediate connector D-23. If intermediate connector D-23 is damaged, repair or replace the connector as described in GROUP 00E, Harness Connector Inspection P.00E-2.

Q: Are the wiring harness between rear door speaker (LH) connector E-09 (terminal 1 and 2) and amplifier connector D-27 (terminal 17 and 18) in good condition?

YES : Go to Step 13.

NO : Repair the wiring harness. The rear door speaker (LH) should sound.

STEP 13. Replace the radio and CD player.

Q: Is sound output normally from the speakers?

YES : There is no action to be taken.

NO : Repair or replace the amplifier. The rear door speaker (LH) should sound.

STEP 14. Check the rear door speaker (RH).

(1) Remove the rear door speaker (RH). Refer to P.54A-180.

(2) Check that the rear door speaker (RH) generates noise when a five-volt voltage is applied on the rear door speaker (RH) terminal.

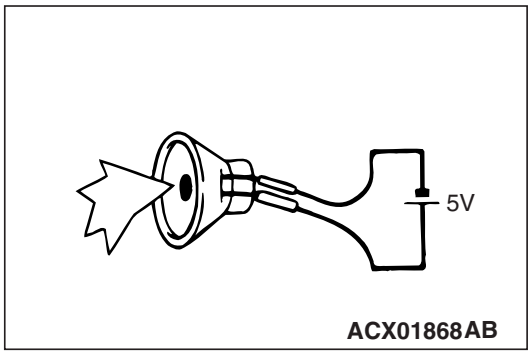

Q: Is the rear door speaker (RH) generating noise?

YES : Go to Step 15.

NO : Replace the rear door speaker (RH). The rear door speaker (RH) should sound.

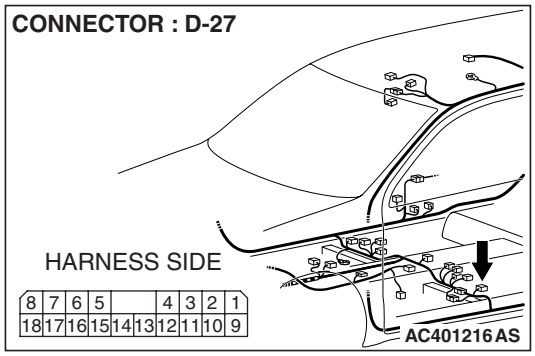

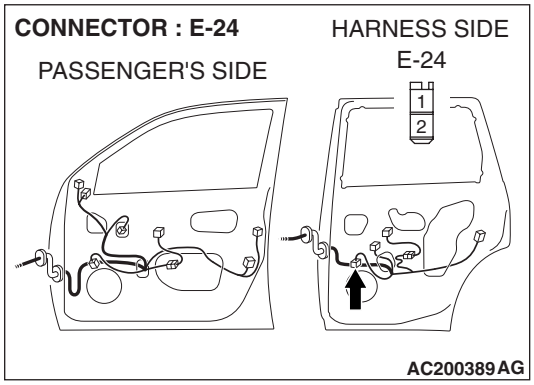

STEP 15. Check rear door speaker (RH) connector E-24 and amplifier connector D-27 for damage.

Q: Are rear door speaker (RH) connector E-24 and amplifier connector D-27 in good condition?

YES : Go to Step 16.

NO : Repair or replace the connector. Refer to GROUP 00E, Harness Connector Inspection P.00E-2. The rear door speaker (RH) should sound.

STEP 16. Check the wiring harness between rear door speaker (RH) connector E-24 (terminal 1 and 2) and audio amplifier connector D-27 (terminal 7 and 8).

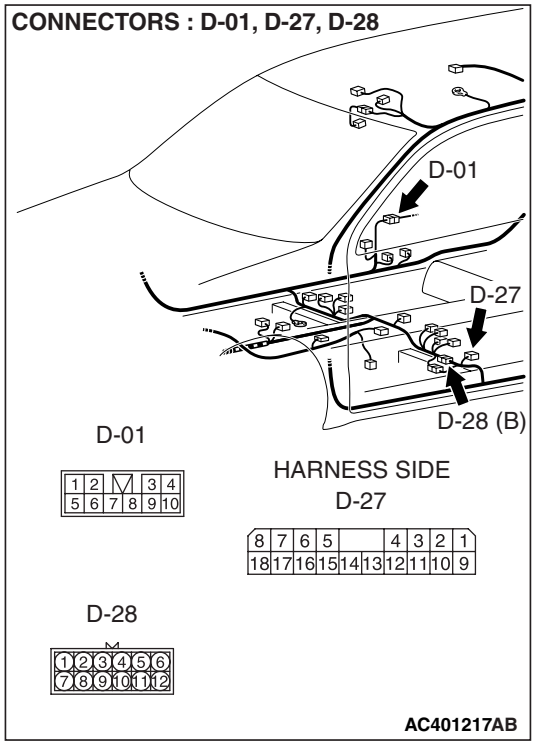

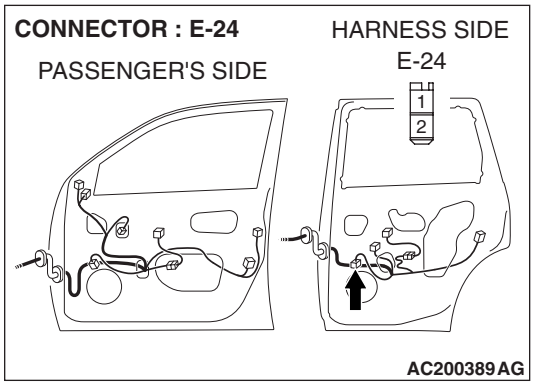

NOTE: Also check intermediate connector D-01 and D-28. If intermediate connector D-01 or D-28 are damaged, repair or replace the connector as described in GROUP 00E, Harness Connector Inspection P.00E-2.

Q: Is the wiring harness between rear door speaker (RH) connector E-24 (terminal 1 and 2) and amplifier connector D-27 (terminal 7 and 8) in good condition?

YES : Go to Step 17.

NO : Repair the wiring harness. The rear door speaker (RH) should sound.

STEP 17. Replace the radio and CD player.

Q: Is sound output normally from the speakers?

YES : There is no action to be taken.

NO : Repair or replace the amplifier. The rear door speaker (RH) should sound.

STEP 18. Check the tweeter (LH).

(1) Remove the tweeter (LH). Refer to P.54A-180.

(2) Check that the tweeter (LH) generates noise when a five-volt voltage is applied on the tweeter (LH) terminal.

Q: Is the tweeter (LH) generating noise?

YES : Go to Step 19.

NO : Replace the tweeter (LH). The tweeter (LH) should sound.

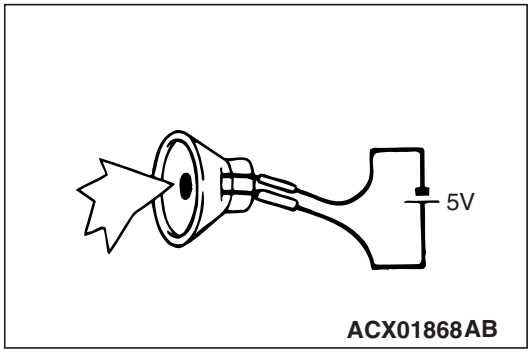

STEP 19. Check tweeter (LH) connector E-06 and amplifier connector D-27 for damage.

Q: Are tweeter (LH) connector E-06 and amplifier connector D-27 in good condition?

YES : Go to Step 20.

NO : Repair or replace the connector. Refer to GROUP 00E, Harness Connector Inspection P.00E-2. The tweeter (LH) should sound.

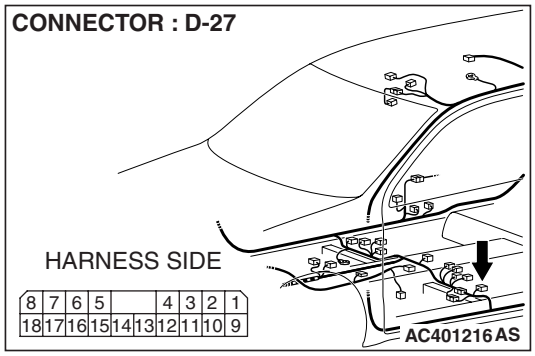

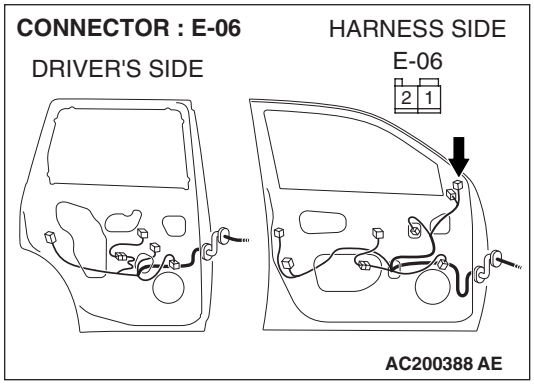

STEP 20. Check the wiring harness between tweeter (LH) connector E-06 (terminal 1 and 2) and amplifier connector D-27 (terminal 14 and 13).

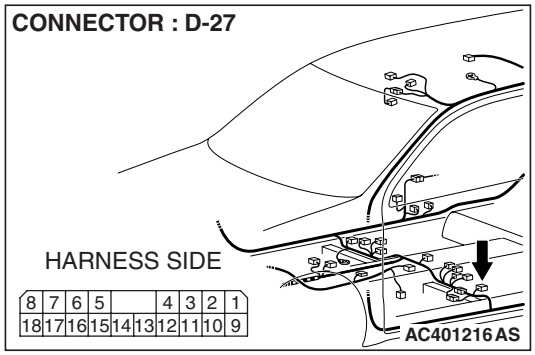

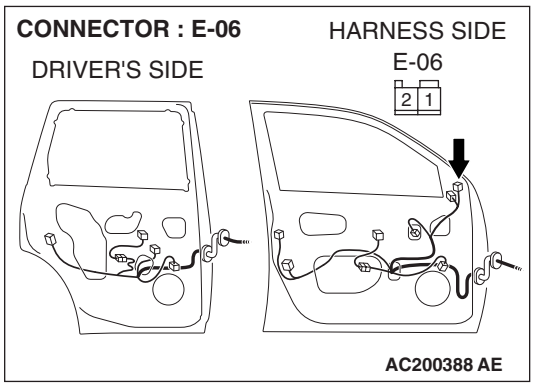

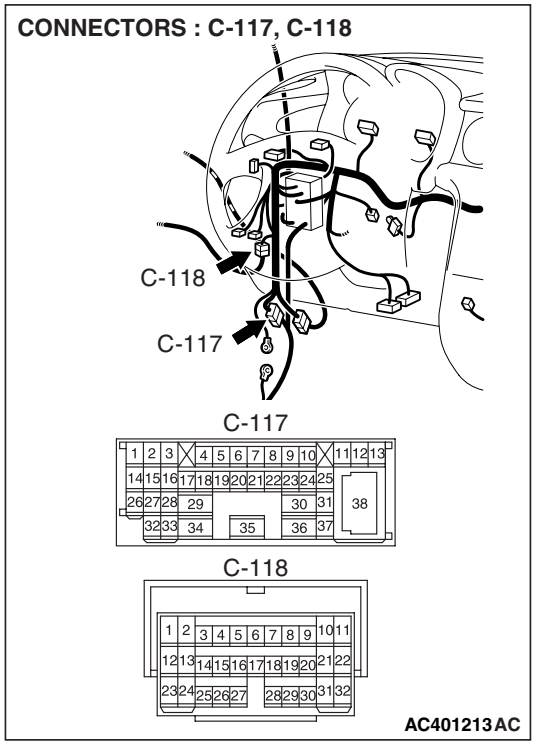

NOTE: Also check intermediate connector C-117 and C-118. If intermediate connector C-117 or C-118 are damaged, repair or replace the connector as described in GROUP 00E, Harness Connector Inspection P.00E-2.

Q: Are the wiring harness between tweeter (LH) connector E-06 (terminal 1 and 2) and amplifier connector D-27 (terminal 14 and 13) in good condition?

YES : Go to Step 21.

NO : Repair the wiring harness. The tweeter (LH) should sound.

STEP 21. Replace the radio and CD player.

Q: Is sound output normally from the speakers?

YES : There is no action to be taken.

NO : Repair or replace the amplifier. The tweeter (LH) should sound.

STEP 22. Check the tweeter (RH).

(1) Remove the tweeter (RH). Refer to P.54A-180.

(2) Check that the tweeter (RH) generates noise when a five-volt voltage is applied on the tweeter (RH) terminal.

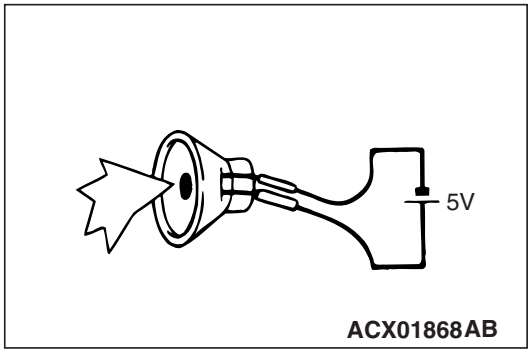

Q: Is the tweeter (RH) generating noise?

YES : Go to Step 23.

NO : Replace the tweeter (RH). The tweeter (RH) should sound.

STEP 23. Check tweeter (RH) connector E-14 and amplifier connector D-27 for damage.

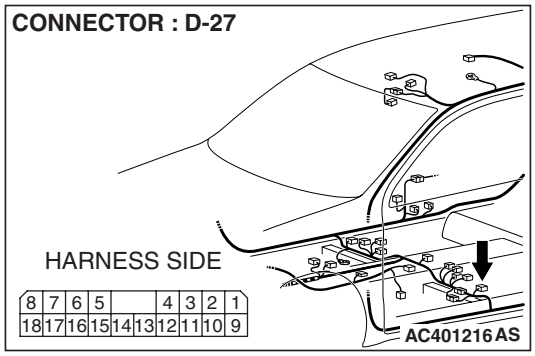

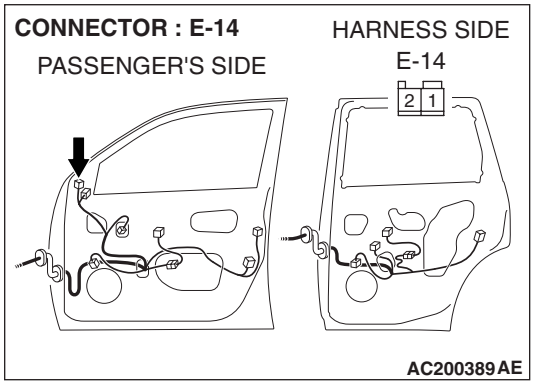

Q: Are tweeter (RH) connector E-14 and amplifier connector D-27 in good condition?

YES : Go to Step 24.

NO : Repair or replace the connector. Refer to GROUP 00E, Harness Connector Inspection P.00E-2. The tweeter (RH) should sound.

STEP 24. Check the wiring harness between tweeter (RH) connector E-14 (terminal 1 and 2) and amplifier connector D-27 (terminal 4 and 3).

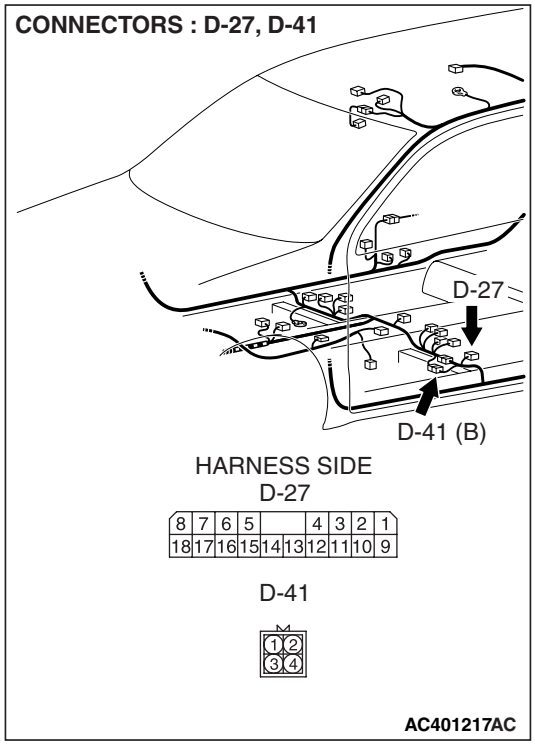

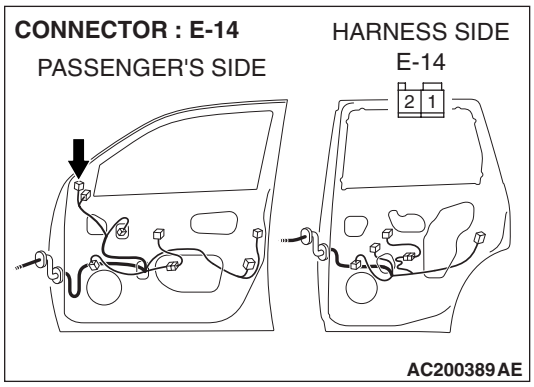

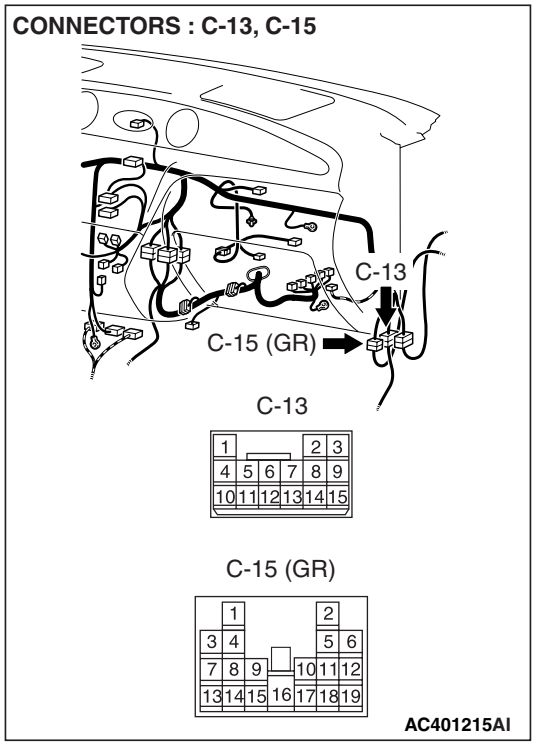

NOTE: Also check intermediate connector C-13, C-15 and D-41. If intermediate connector C-13, C-15 or D-41 are damaged, repair or replace the connector as described in GROUP 00E, Harness Connector Inspection P.00E-2.

Q: Are the wiring harness between tweeter (RH) connector E-14 (terminal 1 and 2) and amplifier connector D-27 (terminal 4 and 3) in good condition?

YES : Go to Step 25.

NO : Repair the wiring harness. The tweeter (RH) should sound.

STEP 25. Replace the radio and CD player.

Q: Is sound output normally from the speakers?

YES : There is no action to be taken.

NO : Repair or replace the amplifier. The tweeter (RH) should sound.

INSPECTION PROCEDURE 5: Noise Appears at Certain Places when Traveling (AM).

DIAGNOSIS

STEP 1. Check the noise occur when entering or near a particular structure (building, tunnel, mountain, etc.)

Q: Dose the noise occur when entering or near a particular structure (building, tunnel, mountain, etc.)?

YES : Go to Step 3.

NO : Go to Step 2.

STEP 2. After taking the following measures to prevent the noise, check that no noise appears.

(1) Change to a different station with a stronger wave to boost resistance to interference.
(2) Suppress high tones to reduce noise.
(3) Extend antenna completely.

Q: Do the following measures eliminate the noise?

YES : The following causes can be considered.

NO : Go to Step 4.

STEP 3. Ask the owner about the state of the noise.

(1) Find out the following information from the owner.
(2) Place where the noise occurs.
(3) Locality conditions (valley, mountain, etc.)
(4) Name and frequency of stations affected by noise

Q: Which is the noise, vehicle noise or external noise?

Vehicle noise : It may not be possible to prevent noise if the signal is weak.

External noise : In almost all cases, prevention on the receiver side is impossible. Weak signals especially are susceptible to interference. Go to Step 4.

STEP 4. Check that there is no noise.

Q: Does noise still exist?

YES : If there is more noise than on radios in other vehicles, find out the noise condition and the name and frequency of the receiving stations from the owner, and consult with the radio manufacturer's service center.

NO : Normal.

INSPECTION PROCEDURE 6: Noise Appears at Certain Places when Traveling (FM).

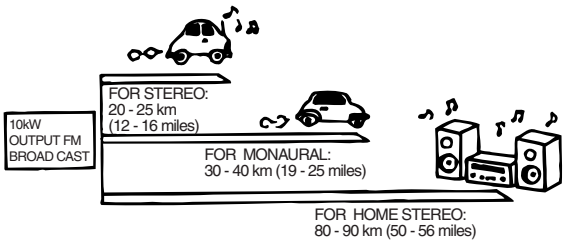

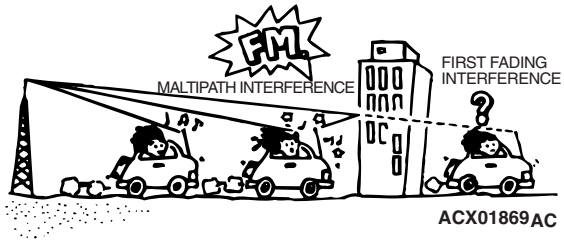

DIAGNOSIS

NOTE: About FM waves: FM waves have the same properties as light, and can be deflected and blocked. Wave reception is not possible in the shadow of obstructions such as buildings or mountains.

1. The signal becomes weak as the distance from the station's transmission antenna increases. This may depend on the signal strength of the transmitting station and intervening geographical formation of buildings. Generally speaking, the area of good reception is approximately 20 - 25 km (12 –16 miles) for stereo reception, and 30 –40 km (19 –25 miles) for monaural reception.
2. The signal becomes weak when an area of shadow from the transmitting antenna (places where there are obstructions such as mountains or buildings between the station transmitter and the vehicle), and noise will appear. <This is called first fading, and gives a steady buzzing noise.>
3. If a direct signal hits the antenna at the same time as a signal reflected by obstructions such as mountains or buildings, interference of the two signals will generate noise. During traveling, noise will appear each time the vehicle's antenna passes through this kind of obstructed area. The strength and interval of the noise varies according to the signal strength and the conditions of deflection. <This is called multipath noise, and is a repetitive buzzing.>
4. Since FM stereo transmission and reception has a weaker field than monaural, it is often accompanied by a hissing noise.

After taking measures to prevent the noise, check that no noise occurs.

5. Change to a different station with a stronger wave to boost resistance to interference.
6. Suppress high tones to reduce noise.
7. Extend antenna completely.

If there is noise, the following causes can be considered.

8. If due to vehicle noise: It may not be possible to prevent noise if the signal is weak.
9. If due to external noise: In almost all cases, prevention on the receiver side is impossible. Weak signals especially are susceptible to interference.

If there is more noise than on radios in other vehicles, find out the noise condition and the name and frequency of the receiving stations from the owner, and consult with the radio manufacturer's service center.

INSPECTION PROCEDURE 7: Mixed with Noise, Only at Night (AM).

The following factors can be considered as possible causes of noise appearing at night.

1. Factors due to signal conditions: Due to the fact that long-distance signals are more easily received at night, even stations that are received without problem during the day may experience interference in a general worsening of reception conditions. The weaker a station is the more susceptible it is to interference, and a change to different station or the appearance of a beating sound* may occur.

   NOTE: Beat sound: Two signals close in frequency interfere with each other, creating a repetitious high-pitched sound. This sound is generated not only by sound signals but electrical waves as well.*

2. Factors due to vehicles noise: Generator noise may be a cause.

DIAGNOSIS

STEP 1. Check that the noise still obvious even when the lights are off.

Q: Is the noise still obvious even when the lights are off?
YES : Go to Step 2.
NO : Go to Step 3.

STEP 2. Check hat the following actions.

(1) Tune to a station with a stronger wave.
(2) Tune to a station with a stronger wave without completely extending the antenna (Whip antenna).

Q: Is there more noise than on radio in other vehicles?
YES : Consult the radio manufacturer's service center.
NO : Check that there is no noise.

STEP 3. Check that the noise fades away when the vehicle harness is moved away from the radio (if the harness is not in the proper position).

Q: Does the noise fade away when the vehicle harness is moved any from the radio (If the harness is not in the proper position)?
YES : Consult the radio manufacturer's service center.
NO : If there is more noise than other radios, consult the radio manufacturer's service center.

INSPECTION PROCEDURE 8: Broadcasts can be Heard but Both AM and FM have a lot of Noise.

DIAGNOSIS

STEP 1. Check the state of the antenna.

Q: Is the mast antenna assembled?
YES : Go to Step 2.
NO : Assemble the mast antenna. Check to see that the noise is gone.

STEP 2. Check that the noise occur when the engine is stopped or the engine is running.

Q: Does noise occur when the engine is stopped or the engine is running?
When the engine is stopped : Go to Step 3.
When the engine is running : Check the vehicle's noise suppressor. (Refer to Inspection Procedure 11 P.54A-167.)

STEP 3. Check that the following actions disappear the noise.
(1) Tune to a station with a stronger wave.
(2) Extend the antenna completely (Mast antenna).
(3) Adjust the sound quality to suppress high tones.

Q: Is the noise eliminated?
YES : Consult the radio manufacturer's service center.
NO : Go to Step 4.

STEP 4. Check that the radio is correctly grounded
The radio is connected to the ground with an assembling screw.

Q: Is the radio correctly grounded?
YES : Go to Step 5.
NO : Consult the radio manufacturer's service center.

STEP 5. Check the connection of the antenna plug and radio and CD player.

Q: Is the antenna plug thoroughly connected to the radio and CD player?
YES : Go to Step 7.
NO : Go to Step 6.

STEP 6. Check that the noise is eliminated when the antenna plug is properly attached.

Q: Is the noise eliminated?
YES : Consult the radio manufacturer's service center.
NO : Go to Step 7.

STEP 7. Check that the antenna is in good condition and is it properly mounted.

Q: Is the antenna in good condition and is it properly mounted?
YES : Consult the radio manufacturer's service center.
NO : Either repair or replace the antenna assembly. Check to see that the noise is gone.

INSPECTION PROCEDURE 9: There is More Noise on Either AM or FM.

DIAGNOSIS

There is much noise only on AM. Due to differences in AM and FM systems, AM is more susceptible to noise interference.

STEP 1. Check that there is noise under the following state(s).

- A motorcycle was passing.
- Lighting was flashing.
- A vehicle passed close by, but it appeared to be a vehicle generating a particularly large amount of noise radiation.
- Passed beneath a power line.
- Passed beneath a telephone line.
- Passed close by a signal generator.
- Passed close by some other sources of electrical noise.
- Passed under a bridge.

Q: Is there noise in the above states?

YES : Go to Step 3.
NO : Go to Step 2.

STEP 2. Continue to check for static; when static is detected, check for the conditions listed above.

Q: Is there noise in the state described in Step 1?

YES : Noise prevention on the radio side is difficult. If the problem is particularly worse than other radios, consult a service center.
NO : Go to Step 3.

STEP 3. Check noise prevention on the radio side is difficult.

Q: Is the noise level worse than other radios?

YES : Consult a service center. Noise encountered during FM reception only. Due to differences in FM and AM systems, FM is not as susceptible as AM to interference from engines, power lines, lighting, etc. On the other hand, due to the characteristics of FM waves, there are sometimes cases of noise or distortion which are generated by typical noise interference (first fading and multipath). (Refer to Inspection Procedure 8 P.54A-164.) <Noise (hissing) occurs in weak signal areas such as mountainous regions, but this is not due to Furthermore, the amount of interference will be comparatively less for vehicles equipped with a diversity antenna system*. If there is an equivalent amount of distortion in vehicles or radios of the same type, then differences will be because of differences in antenna systems, and this should be explained to the user. a problem with the radio.> Furthermore, the amount of interference will be comparatively less for vehicles equipped with a diversity antenna system*. If there is an equivalent amount of distortion in vehicles or radios of the same type, then differences will be because of differences in antenna systems, and this should be explained to the user.
NO : f the noise level is roughly the same as other radios, there is no action to be taken.

INSPECTION PROCEDURE 10: There is Noise when Starting the Engine.

DIAGNOSIS

⚠ CAUTION

- **Connecting a high tension cable to the noise filter may destroy the noise filter and should never be done.**
- **Check that there is no external noise. Since failure to do this may result in an incorrect diagnosis due to the inability to identify the noise source, this operation must be performed.**
- **Noise prevention should be performed by suppressing strong sources of noise step by step.**

NOTE: Capacitor: The capacitor does not pass DC current, but as the number of waves increases when it passes AC current, impedance (resistance against AC) decreases, and current flow is facilitated. A noise suppressing capacitor which take advantage of this property is inserted between the power line for the noise source and the ground. This suppresses noise by grounding the noise component (AC or pulse signal) to the body of the vehicle.

NOTE: Coil: The coil passes DC current, but impedance rises as the number of waves increases relative to the AC current. A noise suppressing coil which takes advantage of this property is inserted into the power line for the noise source, and works by preventing the noise component from flowing or radiating out of the line.

NOISE TYPE SOUNDS ARE IN PARENTHESES	CONDITIONS	CAUSE	REMEDY
AM or FM: ignition noise (popping, snapping, cracking, buzzing)	• Increasing the engine speed causes the generator whine sound to speed up and the volume to decrease • Disappears when the ignition switch turned to "ACC."	• Mainly due to the spark plugs • Due to engine noise	• Check or replace the ground cable. • Check or replace the noise capacitor.
Other electrical components	–	Noise may occur as the electrical components become older.	Repair or replace the electrical components.
Static electricity (cracking, crinkling)	• Disappears when the vehicle is completely stopped. • Severe when the clutch is engaged	Occurs when parts or wiring move for some reason and contact metal parts of the body.	Return parts or wiring to their proper position.

NOISE TYPE SOUNDS ARE IN PARENTHESES	CONDITIONS	CAUSE	REMEDY
Static electricity (cracking, crinkling)	• Various noise are produced depending on the body part of the vehicle.	Due to removal of the front hood, bumpers, exhaust pipe and muffler, suspension, etc.	Ground parts by bonding. Cases where the problem is not eliminated by a signal response to one area are common, due to several body parts being imperfectly grounded.

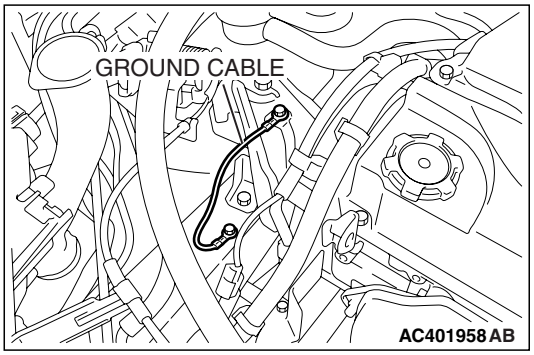

INSPECTION PROCEDURE 11: Some Noise Appears When There is Vibration or Shocks During Traveling.

DIAGNOSIS

STEP 1. Check radio and CD player connector C-102 and amplifier connector D-27 <with amplifier> for damage.

Q: Are radio and CD player connector C-102 and amplifier connector D-27 <with amplifier> in good condition?
YES : Go to Step 2.
NO : Repair or replace the connector. Refer to GROUP 00E, Harness Connector Inspection P.00E-2. Check that there is no noise.

STEP 2. Check that noise appear when the radio switch is turned on while the vehicle is stopped and the radio is tapped while tuned away from a station.

NOTE: Static electricity noise: Body static electric from the shock absorber rubber bushings used to prevent vibration, tires, etc. occurs because of separation from the ground, causing a buzzing noise. Since no measures can be taken to discharge the static electricity of the vehicle body. Check that there is no noise.

Q: Does noise appear when the radio switch is turned on while the vehicle is stopped and the radio is tapped while tuned away from a station?
YES : Go to Step 3.
NO : It may be static electricity noise.

STEP 3. Check that the radio correctly grounded.

The radio is connected to the ground with an assembling screw.

Q: Is the radio correctly grounded?
YES : Go to Step 4.
NO : Tighten the screw securely. Check that there is no noise.

STEP 4. Check by replacing radio and CD player.

Q: Are operations normal when using another radio and CD player?
YES : Either repair or replace the radio and CD player. Check that there is no noise.
NO : Either repair or replace the antenna assembly. Check that there is no noise.

INSPECTION PROCEDURE 12: Noise Sometimes Appears on FM during Traveling.

DIAGNOSIS

STEP 1. Check the state of the antenna.

Q: Is the mast antenna assembled?
YES : Go to Step 2.
NO : Assemble the mast antenna. Check that there is no noise.

STEP 2. The check after adjusting the radio.

Q: Readjust the radio. Is the noise eliminated?
YES : Check that there is no noise.
NO : Go to Step 3.

STEP 3. Check with several broadcasting stations.

NOTE: Multipath noise and fading noise: Because of the frequency of FM waves in extremely high, it is highly susceptible to effects from geological formations and buildings. These effects disrupt the broadcast signal and obstruct reception in several ways.

- *Multipath noise*
  This describes the echo that occurs when the broadcast signal is reflected by a large obstruction and enters the receiver with a slight time delay relative to the direct signal (repetitious buzzing).
- *Fading noise*
  This is a buzzing noise that occurs when the broadcast beam is disrupted by obstructing objects and the signal strength fluctuates intricately within a narrow range.

Q: Is the abnormality in reception generated only within a certain range?
YES : The effect of an electrical field condition (multipath noise, fading noise) could be the cause. Check that there is not noise.
NO : Go to Step 4.

STEP 4. Check that noise appears when the radio switch is turned on while the vehicle is stopped.

NOTE: Static electricity noise: Body static electric from the shock absorber rubber bushings used to prevent vibration, tires, etc. occurs because of separation from the ground, causing a buzzing noise. There is no measures to discharge the static electricity of the vehicle body. Check that there is no noise.

Q: Does noise appear when the radio switch is turned on while the vehicle is stopped and the radio is tapped while tuned away from a station?
YES : Go to Step 5.
NO : It may be static electricity noise.

STEP 5. Check that the radio is correctly grounded.

The radio is connected to the ground with an assembling screw.

Q: Is the radio correctly grounded?
YES : Go to Step 6.
NO : Tighten the screw securely. Check that there is no noise.

STEP 6. Check by replacing radio and CD player.

Q: Are operations normal when using another radio and CD player?
YES : Either repair or replace the radio and CD player. Check that there is no noise.
NO : Either repair or replace the antenna assembly. Check that there is no noise.

INSPECTION PROCEDURE 13: Ever-Present Noise.

DIAGNOSIS

Noise is often created by the following factors, and often the radio is OK when it is checked individually.

- Traveling conditions of the vehicle
- Terrain of area traveled through
- Surrounding buildings
- Signal conditions
- Time period

For this reason, if there are still problems with noise even after the measures described in inspection procedure 7 to 14 have been taken, get information on the factors listed above as well as determining whether the problem occurs with AM or FM, the station names, frequencies, etc. and contact the radio manufacturer's service center.

INSPECTION PROCEDURE 14: There is Noise but No Reception for Both AM and FM or No Sound from AM, or No Sound from FM.

DIAGNOSIS

STEP 1. Check the state of the antenna.

Q: Is the mast antenna assembled?
YES : Go to Step 2.
NO : Assemble the mast antenna. The radio should sound normally.

STEP 2. Check to see if inspections are taking place is an area exposed to special electric fields.

Q: Are inspections taking place under special electric field conditions? (underground garage, inside a building, etc.)?
YES : Go to Step 3.
NO : Go to Step 4.

STEP 3. Relocate and check.
Automatically receive in a good reception area that is not exposed to special electric fields.

Q: Is reception of the strongest radio frequency possible within the area?
YES : There is no action to be taken.
NO : Go to Step 4.

STEP 4. Tune then check.

Q: Did the sensitivity improve after tuning?
YES : There is no action to be taken.
NO : Go to Step 5.

STEP 5. Check the connection of the antenna plug and radio and CD player.

Q: Is the antenna plug thoroughly connected to the radio and CD player?
YES : Go to Step 6.
NO : Thoroughly connect the antenna plug and the radio and CD player. The radio should sound normally.

STEP 6. Check by replacing radio and CD player.

Q: Are operations normal when using another radio and CD player?
YES : Either repair or replace the radio and CD player. The radio should sound normally.
NO : Either repair or replace the antenna assembly. The radio should sound normally.

INSPECTION PROCEDURE 15: Poor Reception.

DIAGNOSIS

STEP 1. Check the state of the antenna.

Q: Is the mast antenna assembled?
YES : Go to Step 2.
NO : Assemble the mast antenna. Check that a poor reception is resolved.

STEP 2. Check to see if inspections are taking place is an area exposed to special electric fields.

Q: Are inspections taking place under special electric field conditions? (underground garage, inside a building, etc.)?
YES : Go to Step 3.
NO : Go to Step 4.

STEP 3. Relocate and check.
Automatically receive in a good reception area that is not exposed to special electric fields.

Q: Is reception of the strongest radio frequency possible within the area?
YES : Check that a poor reception is resolved.
NO : Go to Step 4.

STEP 4. Tune then check.

Q: Did the sensitivity improve after tuning?
YES : Check that a poor reception is resolved.
NO : Go to Step 5.

STEP 5. Check with several broadcasting stations.

NOTE: Multipath noise and fading noise: Because the frequency of FM waves is extremely high, it is highly susceptible to effects from geological formations and buildings. These effects disrupt the broadcast signal and obstruct reception in several ways.

- *Multipath noise*
  This describes the echo that occurs when the broadcast signal is reflected by a large obstruction and enters the receiver with a slight time delay relative to the direct signal (repetitious buzzing).
- *Fading noise*
  This is a buzzing noise that occurs when the broadcast beam is disrupted by obstructing objects and the signal strength fluctuates intricately within a narrow range.

Q: Is the abnormality in reception generated only within a certain range?
YES : Check that a poor reception is resolved.
NO : Go to Step 6.

STEP 6. Check the connection of the antenna plug and radio and CD player.

Q: Is the antenna plug thoroughly connected to the radio and CD player?
YES : Go to Step 7.
NO : Thoroughly connect the antenna plug and the radio and CD player. Check that a poor reception is resolved.

STEP 7. Check by replacing radio and CD player.

Q: Are operations normal when using another radio and CD player?
YES : Either repair or replace the radio and CD player. Check that a poor reception is resolved.
NO : Either repair or replace the antenna assembly. Check that a poor reception is resolved.

INSPECTION PROCEDURE 16: Distortion on AM or on Both AM and FM.

DIAGNOSIS

STEP 1. Check the degree in which distortion is generated.

Q: How much distortion is generated?
Occasional distortion : Go to Step 2.
Constant distortion : Go to Step 3.

STEP 2. Check by the transmission antenna.

Q: Is there distortion by the transmission antenna?
YES : The input from the antenna is too big.
NO : Go to Step 3.

STEP 3. Check how the speakers are setup.

Q: Are any cords coming in contact with the paper cones of the speakers?
YES : Move the cords so that they do not come in contact with the paper cones of the speaker. Check that a distortion is resolved.
NO : Go to Step 4.

STEP 4. Check the speakers.

(1) Remove the speakers.
(2) Check to see if there is any ripping of the paper cones or any foreign obstacles in the paper cone.

Q: Are the speakers normal?
YES : Go to Step 5.
NO : Repair or replace the speakers. Check that a distortion is resolved.

STEP 5. Check how the speakers are setup.

Q: Check to see if the speakers are setup in a deformed manner.
YES : Correct the way the speakers are setup so they are securely setup. Check that a distortion is resolved.
NO : Repair or replace the radio and CD player. Check that a distortion is resolved.

INSPECTION PROCEDURE 17: Distortion on FM Only.

DIAGNOSIS

STEP 1. Check with another broadcasting station.

Q: Is there distortion when turning to another broadcasting station?
YES : Go to Step 2.
NO : The signal from that station is too weak.

STEP 2. Relocate the reception area and check.

Q: When relocating the reception area does the distortion increase or decrease?
YES : The cause may be multipath noise.
NO : Repair or replace the radio and CD player. Check that a distortion is resolved.

INSPECTION PROCEDURE 18: Using the Auto Select Function, Too Few Automatic Stations are Selected.

DIAGNOSIS

STEP 1. Check the state of the antenna.

Q: Is the mast antenna assembled?
YES : Go to Step 2.
NO : Assemble the mast antenna. The auto-select function should operate normally.

STEP 2. Check the number of radio stations.

Q: Are there sufficient numbers of radio stations within the area?
YES : Go to Step 3.
NO : Go to Step 4.

STEP 3. Check the distance from the transmission antenna.

Q: Is there a transmission antenna within a range of 2 miles?
YES : Go to Step 5.
NO : Go to Step 4.

STEP 4. The check if there are not that many radio stations and when there is no transmission antenna in the vicinity.
Execute automatic selection and check to see that the strongest radio frequency is receivable within the area.

Q: Is reception of the strongest radio frequency possible within the area?
YES : There is no action to be taken.
NO : Go to Step 5.

STEP 5. Check to see if inspections are taking place is an area exposed to special electric fields.

Q: Are inspections taking place under special electric field conditions? (underground garage, inside a building, etc.)?
YES : Go to Step 6.
NO : Go to Step 7.

STEP 6. Relocate and check.
Automatically receive in a good reception area that is not exposed to special electric fields.

Q: Is reception of the strongest radio frequency possible within the area?
YES : There is no action to be taken.
NO : Go to Step 7.

STEP 7. Check the connection of the antenna plug and radio and CD player.

Q: Is the antenna plug thoroughly connected to the radio and CD player?
YES : Repair or replace the radio and CD player. The auto-select function should operate normally.
NO : Thoroughly connect the antenna plug and the radio and CD player. The auto-select function should operate normally.

INSPECTION PROCEDURE 19: Preset Station are Erased.

Memory Backup Power Circuit

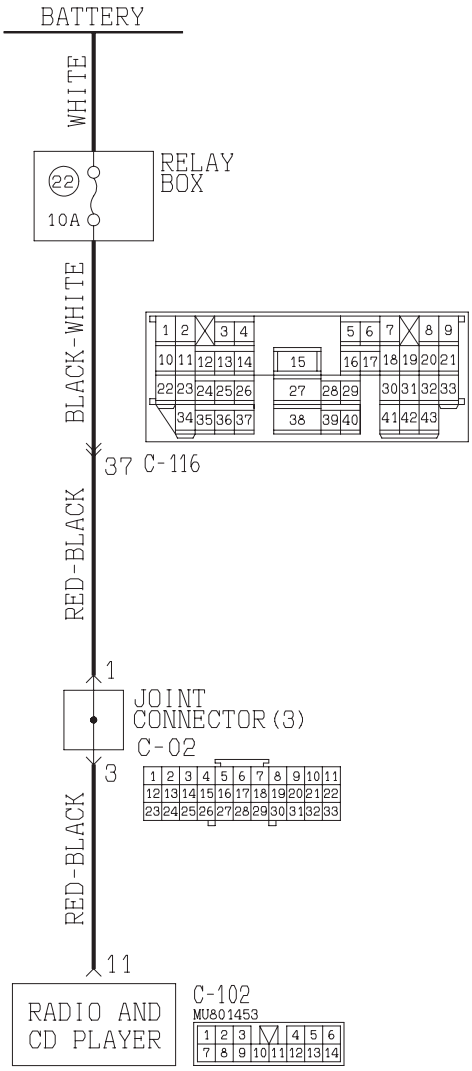

AC203811AB

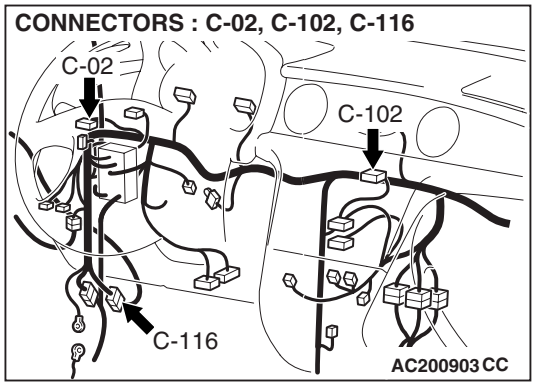

CIRCUIT OPERATION

The power is constantly supplied to the radio and CD player.

TECHNICAL DESCRIPTION (COMMENT)

The cause is probably a faulty radio and CD player memory backup power supply circuit system.

TSB Revision

TROUBLESHOOTING HINTS

- Damaged wiring harness or connector.
- Malfunction of the radio and CD player.

DIAGNOSIS

Required Special Tool:
- MB991223: Harness set

STEP 1. Check at radio and CD player connector C-102 by backprobing in order to check the power supply circuit to the radio and CD player (through the battery).

(1) Do not disconnect radio and CD player connector C-102.

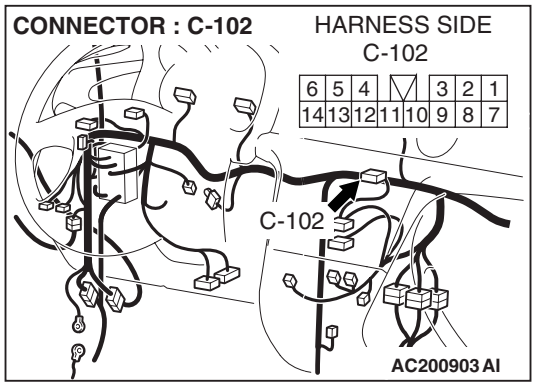

(2) Measure the voltage between terminal number 11 and ground by backprobing.
- The measured value should be approximately 12 volts (battery positive voltage).

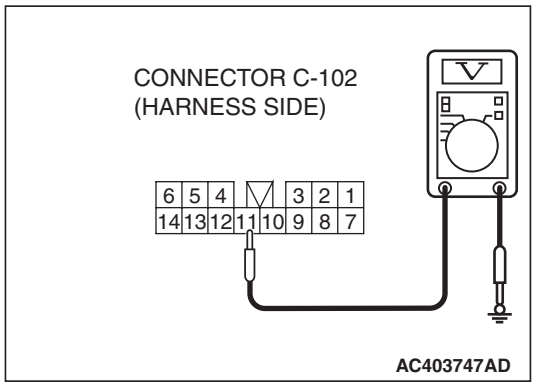

Q: Does the measured voltage correspond with this range?

YES : Either repair or replace the radio and CD player. Check that a memory is retained.

NO : Go to Step 2.

STEP 2. Check radio and CD player connector C-102 for damage.

Q: Is radio and CD player connector C-102 in good condition?

YES : Go to Step 5.

NO : Repair or replace the connector. Refer to GROUP 00E, Harness Connector Inspection P.00E-2. Check that a memory is retained.

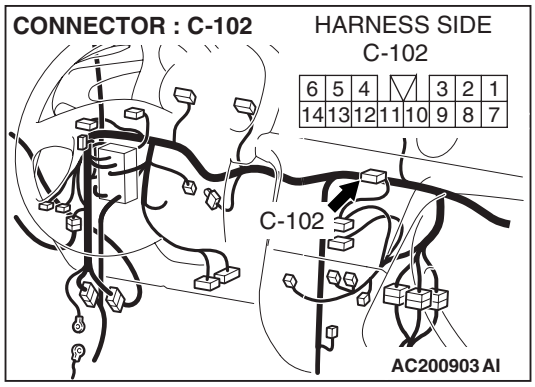

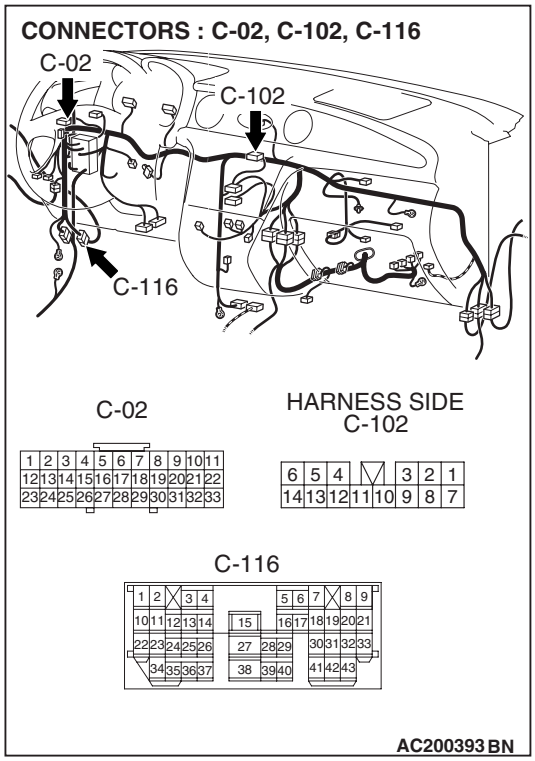

STEP 5. Check the wiring harness between radio and CD player connector C-102 (terminal 11) and battery.

NOTE: Also check joint connector C-02 and intermediate connector C-116. If joint connector C-02 or intermediate connectors C-116 is damaged, repair or replace the connector as described in GROUP 00E, Harness Connector Inspection P.00E-2.

Q: Are the wiring harness between radio and CD player connector C-22 (terminal 11) and battery in good condition?

YES : Repair or replace the radio and CD player. Check that a memory is retained.

NO : Repair the wiring harness. Check that a memory is retained.

INSPECTION PROCEDURE 20: CD can Not be Inserted.

DIAGNOSIS

STEP 1. Check that a CD has been already loaded.

Q: Has a CD been already loaded?

NO : Go to Step 2.

YES : Take out the CD (If the CD can not be ejected, refer to INSPECTION PROCEDURE 24 P.54A-177). Check that a CD can be inserted.

STEP 2. Check how a CD is inserted.

- Ensure that the ignition switch is at "ACC" or "ON".

NOTE: If you try to load a CD when the ignition switch is at the positions other than "ACC" or "ON", the CD will not be inserted completely and then rejected.

Q: If you try to load the CD, does the CD stops halfway and then rejected?
YES : Refer to INSPECTION PROCEDURE 24 P.54A-177.
NO : Go to Step 3.

STEP 3. Check after the CD is loaded.

NOTE: Even though the CD is loaded, "E" (error) is sometimes displayed with the CD rejected because of vibration/shock or dew on the CD face or optical lens.

Q: Though the CD is inserted completely, is "E" (error) displayed and the CD ejected?
YES : Go to Step 4.
NO : There is no action to be taken.

STEP 4. Check the CD.

Check the CD for the conditions below:
- Is the CD loaded with its label facing down?
- Is the recorded face dirty or scratched?
- Is there dew on the recorded face?

Q: Is the CD in good condition?
YES : Go to Step 5.
NO : The original CD is defective. Check that a CD can be inserted.

STEP 5. Check again using a normal CD, which is not dirty or scratched.
- Load another normal CD.
- Check that the CD player recognizes and play the CD.

Q: When you substitute another normal CD, is the CD loaded correctly?
YES : The original CD is defective. Check that a CD can be inserted.
NO : Replace or repair the CD player. Check that a CD can be inserted.

INSPECTION PROCEDURE 21: No Sound. (CD only)

DIAGNOSIS

STEP 1. Check again using a normal CD, which is not dirty or scratched.

Q: When you substitute another normal CD, is the CD played normally?
YES : The original CD is defective. The CD player should sound normally.
NO : Go to Step 2.

STEP 2. Check power supply to the CD player when the ignition switch is at "ACC" or "ACC".

Q: Is the radio and CD player energized when the ignition switch is turned to the "ACC" or "ON position?
YES : Replace or repair the CD player. The CD player should sound normally.
NO : Check the memory backup power supply circuit. Refer to Inspection Procedure 1 P.54A-123.

INSPECTION PROCEDURE 22: CD Sound Skips.

DIAGNOSIS

STEP 1. Check the state in which the sound on the CD jumps.

Q: Does the sound jump when the car is parked?
YES : Go to Step 2.
NO : Go to Step 4.

STEP 2. Check the surface of the CD.

Q: Are there any scratches or soiling on the CD?
YES : The CD is defective if there are any scratches. Clean the CD surface if it is dirty. Check that a CD sound skip is resolved.
NO : Go to Step 3.

STEP 3. Check when replacing with a CD that can be played normally without any scratches or soiling.

Q: Does the CD play normally when replaced with a CD that is not scratched or dirty and can play normally?
YES : Defective CD used. Check that a CD sound skip is resolved.
NO : Go to Step 4.

STEP 4. Check by tapping the radio and CD player.

NOTE: Check by using a proper CD which is free from scratches, dirt or any other abnormality.

Q: Does the sound jump when tapping the radio and CD player?
YES : Securely mount the radio and CD player. Check that a CD sound skip is resolved.
NO : Either repair or replace the radio and CD player. (Take the following measures if a servicing shop is closely).
1. Investigate in detail the state when the sound jumps while driving the car.
2. Describe the state to the service shop for consultation.
3. Either repair or replace the radio and CD player according to the instructions of the service shop.

Check that a CD sound skip is resolved.

INSPECTION PROCEDURE 23: Sound Quality is Poor.

DIAGNOSIS

Check to see that the CD can be played normally and that it is free of any scratches or soiling.
Replace with better sound quality CD.

Q: Is the sound quality better replacing the CD with a clean CD without any scratches that can be played?
YES : Defective CD used. The sound quality should return to normal.
NO : Either repair or replace the radio and CD player. The sound quality should return to normal.

INSPECTION PROCEDURE 24: CD can not be Ejected.

DIAGNOSIS

Check the power of ignition switch "ACC".

Q: Does the radio and CD player power turn ON when the ignition switch is in the "ACC" or "ON" position?
YES : Either repair or replace the radio and CD player. Check that a CD can be ejected normally.
NO : Check the memory backup power supply circuit. Refer to Inspection Procedure 1 P.54A-123.

SPECIAL TOOLS

M1544000600221

TOOL	TOOL NUMBER AND NAME	SUPERSESSION	APPLICATION
A B C D DO NOT USE MB991223AZ	MB991223 A: MB991219 B: MB991220 C: MB991221 D: MB991222 Harness set A: Test harness B: LED harness C: LED harness adapter D: Probe	General service tools	Making voltage and resistance measurements during troubleshooting A: Connect pin contact pressure inspection B: Power circuit inspection C: Power circuit inspection D: Commercial tester connection
MB992006	MB992006 Extra fine probe	General service tool	Making voltage and resistance measurement during troubleshooting

ON-VEHICLE SERVICE

SPEAKER TEST

M1544005400415

Enter the speaker test mode according to the following steps:

1. Turn the Ignition switch to "ACC" or "ON" position and switch off the radio and CD player.
2. Press the following buttons in that order within sixty seconds from step (1).
   (1) Memory select "1" button
   (2) "TUNE/SEEK (DOWN)" button
   (3) "TUNE/SEEK (UP)" button
   (4) Memory select "6" button

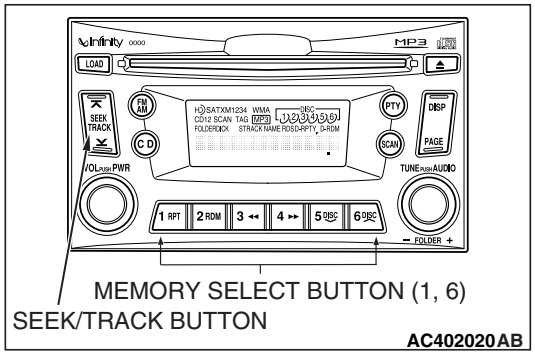

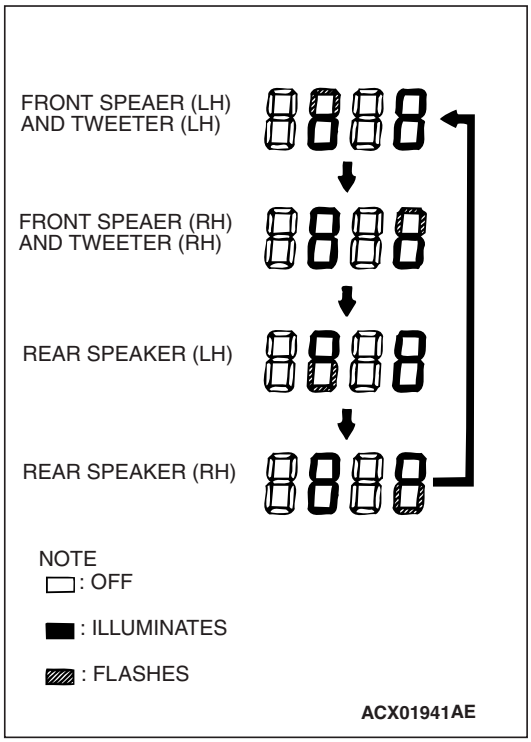

3. Check that the speaker, which is displayed on the multi-center display, sounds (If the memory select "6" button is pressed, the speaker will be changed).
4. If a button other than the memory select "6" button and "EJECT" button is pressed, or the ignition switch is turned to "LOCK" (OFF) position, you will exit from the speaker test mode.

RADIO WITH TAPE PLAYER AND CD PLAYER

REMOVAL AND INSTALLATION

M1544001400383

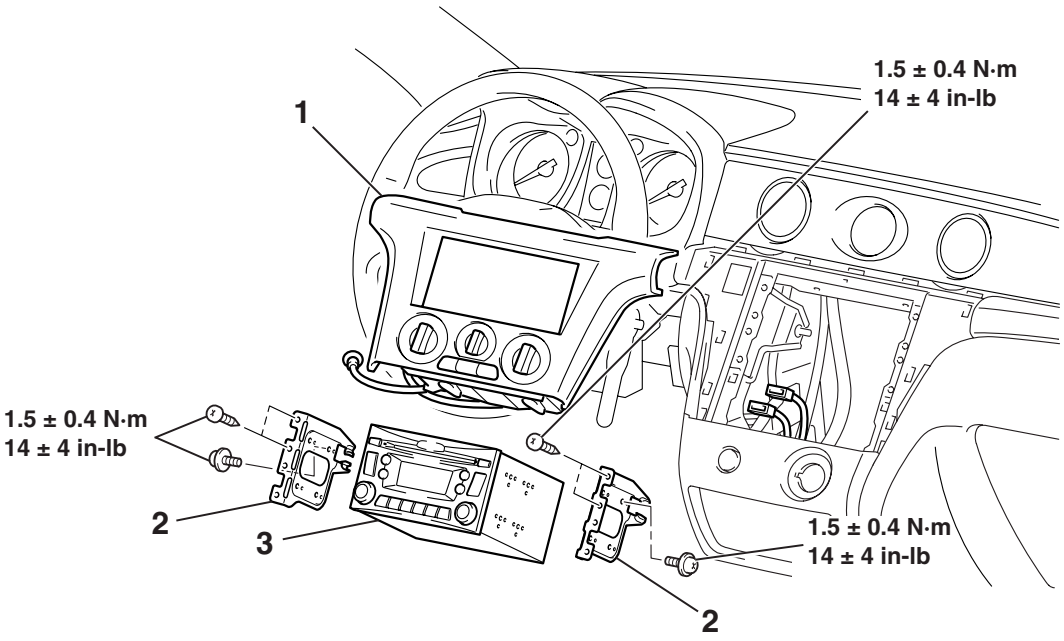

REMOVAL STEPS

1. CENTER PANEL ASSEMBLY (REFER TO GROUP 52A, INSTRUMENT PANEL P.52A-18.)

REMOVAL STEPS (Continued)

2. RADIO BRACKET
3. RADIO AND CD PLAYER AND CD AUTO CHANGER

SPEAKER

SPECIAL TOOL

M1543000602923

TOOL	TOOL NUMBER AND NAME	SUPERSESSION	APPLICATION
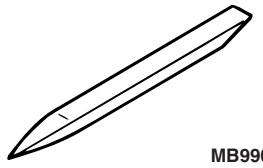 MB990784	MB990784 Ornament remover	General service tool	Removal of front speaker garnish, rear speaker garnish and delta cover

REMOVAL AND INSTALLATION

M1544002600283

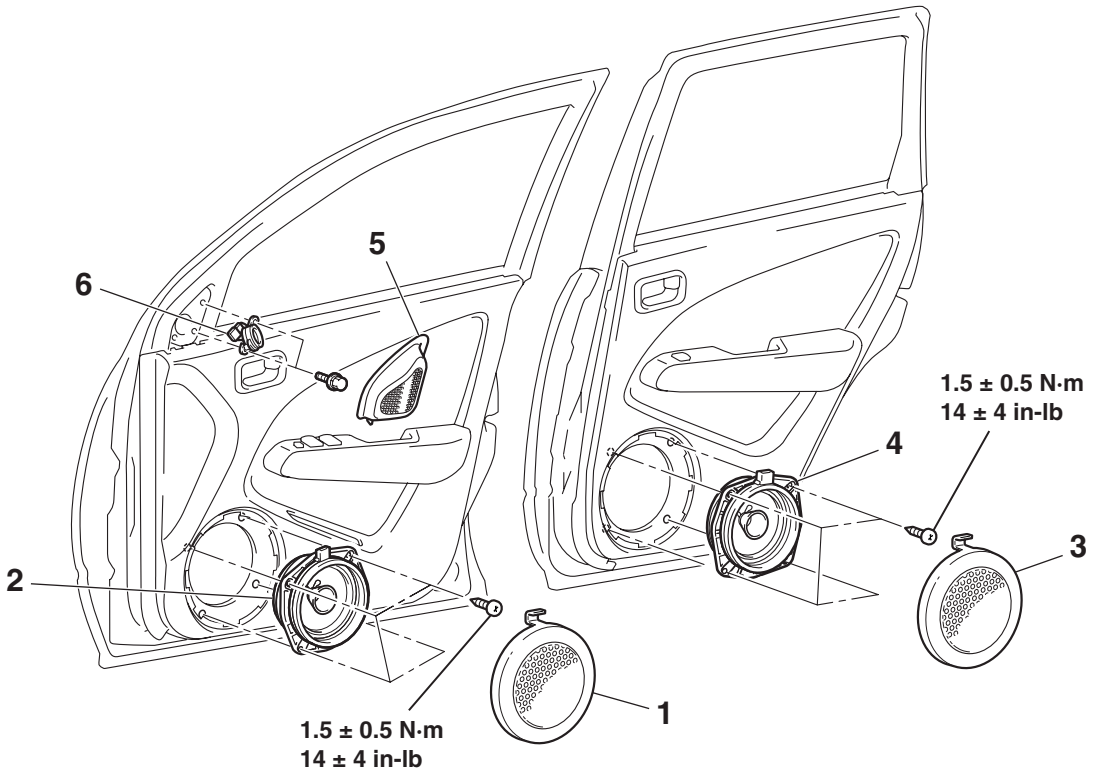

AC102825AC

FRONT SPEAKERS REMOVAL

1. FRONT SPEAKER GARNISH
2. FRONT SPEAKERS

REAR SPEAKERS REMOVAL

3. REAR SPEAKER GARNISH
4. REAR SPEAKERS

TWEETER REMOVAL

5. DELTA COVER (REFER TO GROUP 51, DOOR MIRROR P.51-63.)
6. TWEETER

AMPLIFIER

REMOVAL AND INSTALLATION

M1544004100284

⚠ ***WARNING***

Before removing a seat equipped with the side-airbag module, refer to GROUP 52B, SRS Service Precautions P.52B-29.

Pre-removal and Post-installation Operation
- Front Driver's Seat Removal and Installation (Refer to GROUP 52A –Front Seat Assembly P.52A-38).

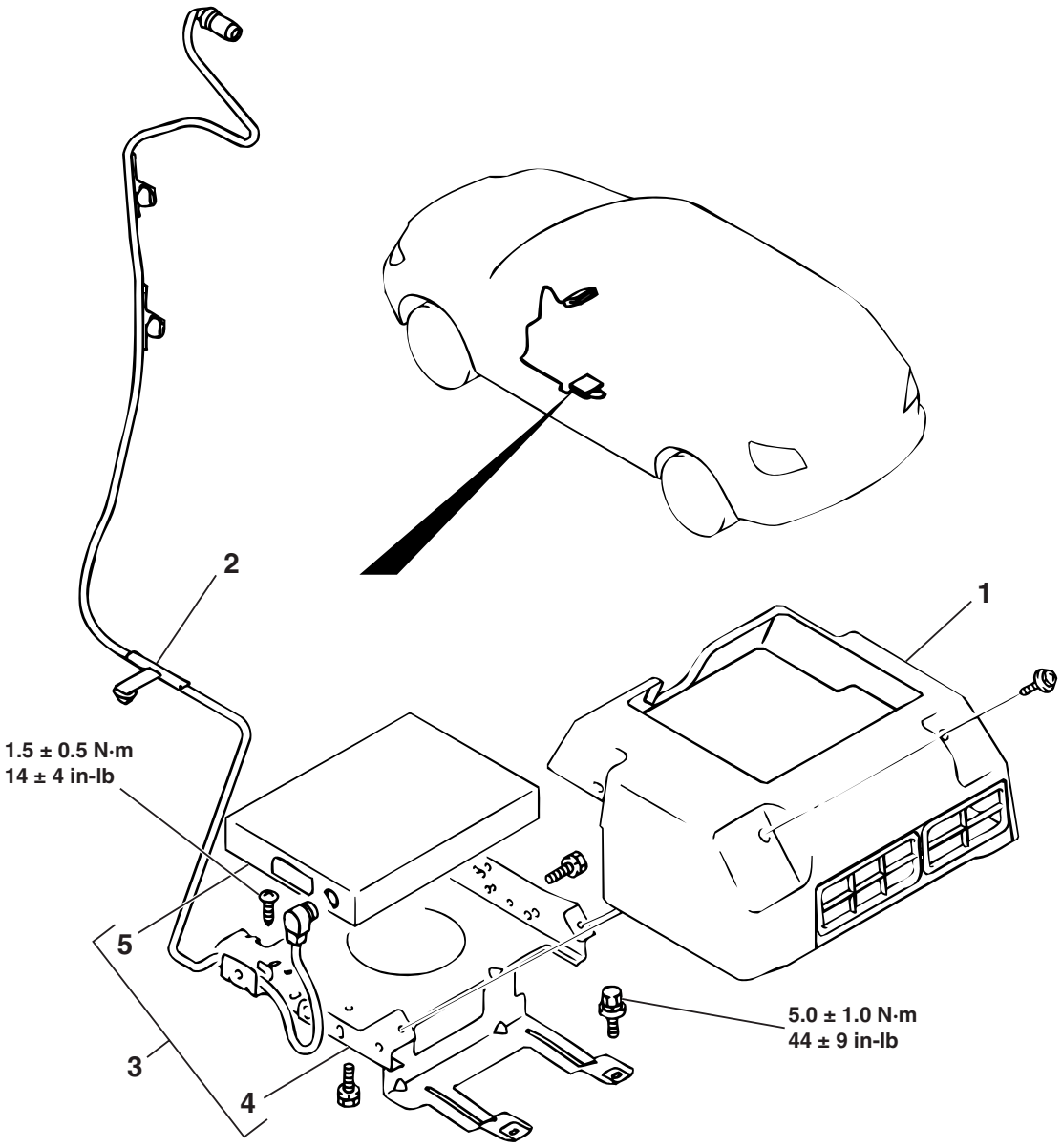

AC203798 AB

AMPLIFIER REMOVAL STEPS
1. COVER
2. DIN CABLE
3. AMPLIFIER ASSEMBLY
4. BRACKET
5. AMPLIFIER

NOTE: Install each seat assembly mounting bolt in every installation location, then tighten to the specified torque.

TSB Revision

ANTENNA

REMOVAL AND INSTALLATION

M1544002900701

Pre-removal and Post-installation Operation
- Front Pillar Trim, Quarter Trim Upper, Quarter Trim Lower, Center Pillar Trim Lower, Center Pillar Trim Upper (Refer to GROUP 52A, Trim P.52A-26.)
- Assist Grip, Headlining (Refer to GROUP 52A, Headlining P.52A-35.)
- Instrument Panel Removal and Installation (Refer to GROUP 52A, Instrument Panel P.52A-18.)

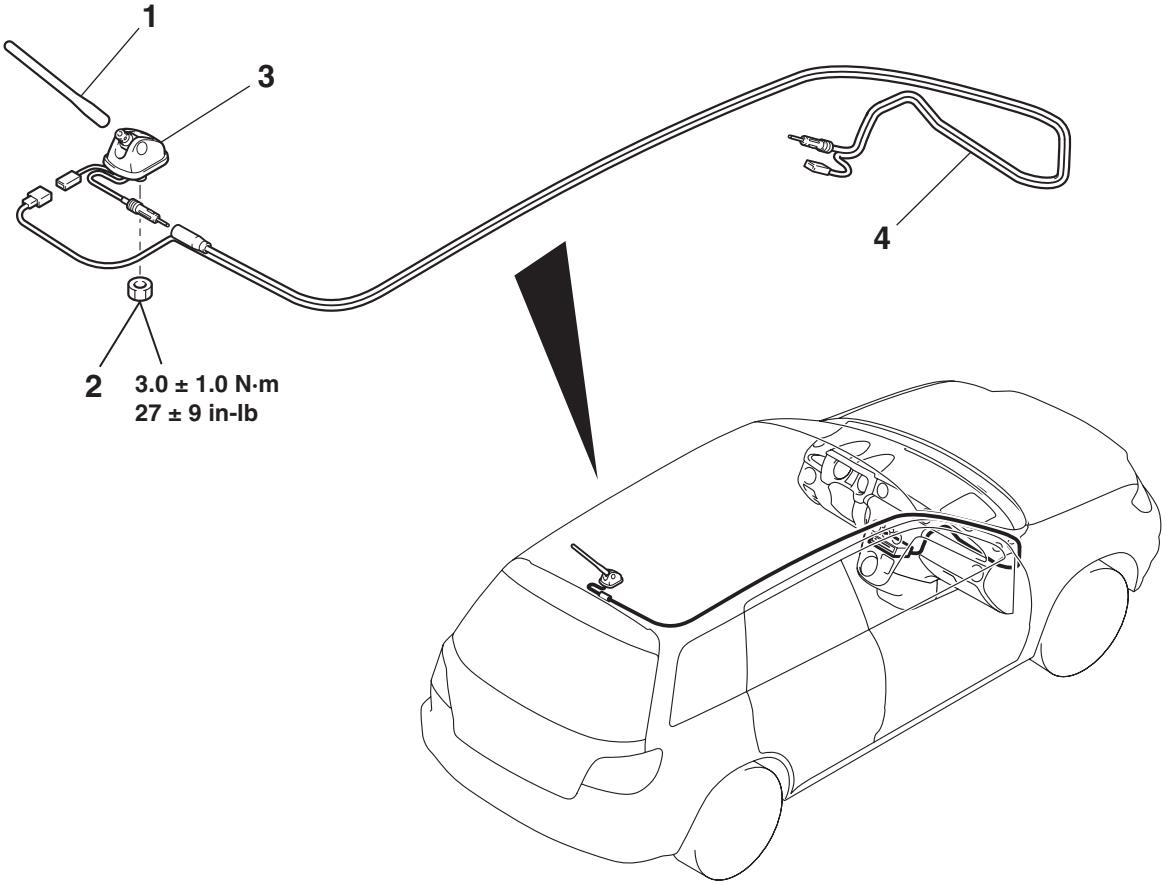

AC300925AC

MAST ANTENNA REMOVAL STEPS
1. ROD ASSEMBLY
2. ANTENNA NUT

MAST ANTENNA REMOVAL STEPS (Continued)
3. BASE
4. ANTENNA FEEDER ASSEMBLY

REAR WINDOW DEFOGGER

GENERAL DESCRIPTION

M1543000100115

OPERATION

Rear Defogger operation

- The defogger relay turns ON if the defogger switch built-in the A/C-ECU is turned ON when the ignition switch is in the "ON" position. When the defogger relay turns ON, power is supplied to the defogger and the defogger is activated. The defogger comes with a timer function that causes the defogger switch to automatically turn OFF in about 11 minutes after the defogger switch is turned ON.

EQUIPMENT DIAGNOSIS

REAR WINDOW DEFOGGER DIAGNOSIS

M1543000700645

The rear window defogger is controlled by the A/C-ECU. For troubleshooting, refer to GROUP 55, Manual A/C Diagnosis P.55A-5.

ON-VEHICLE SERVICE

PRINTED-HEATER LINES CHECK

M1543001800195

1. Run engine at 2,000 r/min. Check heater element with battery at full.
2. Turn "ON" rear window defogger switch. Measure heater element voltage with circuit tester at rear window glass centre A. Condition is good if it indicates about six volts.
3. If 12 volts is indicated at A, there is a break in the negative terminals from A. Move test bar slowly to negative terminal to detect where voltage changes suddenly (0 volt).
4. If 0 volt is indicated at A, there is a break in the positive terminals from A. Defect where the voltage changes suddenly (12 volts) in the same method described above.

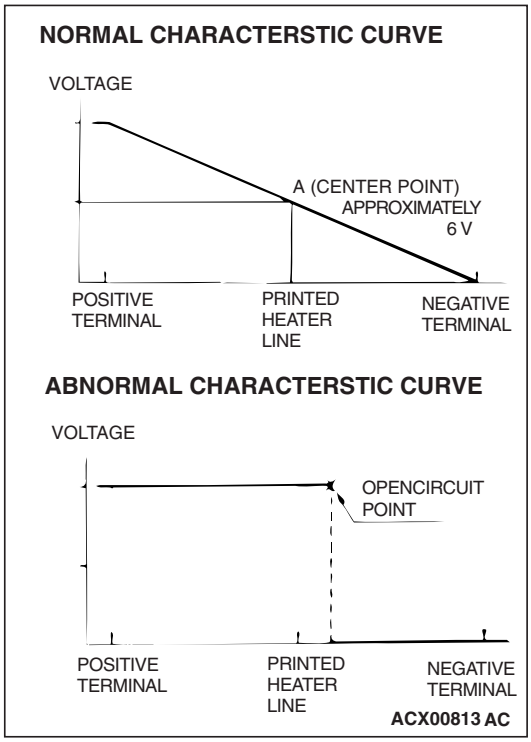

REAR WINDOW DEFOGGER SWITCH

REMOVAL AND INSTALLATION

M1543006200198

Refer to GROUP 55, Heater Control Assembly and Blower Switch Assembly P.55A-84.

INSPECTION

M1543019501471

DEFOGGER RELAY CHECK

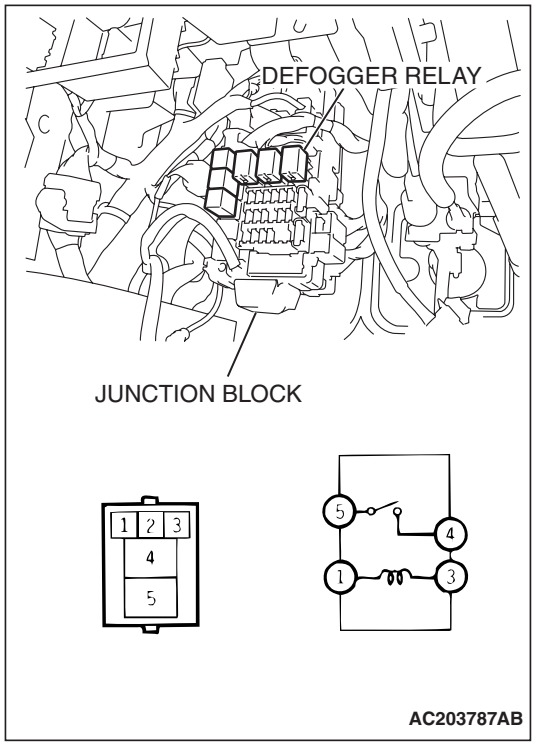

BATTERY VOLTAGE	TESTER CONNECTION	SPECIFIED CONDITION
Not supplied	4 –5	Open circuit
• Connect terminal 1 to the positive battery terminal • Connect terminal 3 to the negative battery terminal	4 –5	Less than 2 ohms

SPECIFICATIONS

FASTENER TIGHTENING SPECIFICATIONS

M1544004600342

ITEM	SPECIFICATION
Amplifier bracket mounting screw	1.5 ±0.5 N· m (14 ±4 in-lb)
Amplifier bracket mounting bolt	5.0 ±1.0 N· m (44 ±9 in-lb)
Antenna base mounting nut	3.0 ±1.0 N· m (27 ±9 in-lb)
Combination meter mounting screw	1.5 ±0.5 N· m (14 ±4 in-lb)
Clock mounting screw	1.5 ±0.5 N· m (14 ±4 in-lb)
Engine coolant temperature gauge unit	16 ±2 N· m (11 ±1 ft-lb)
Fog light assembly mounting bolt	2.5 ±0.3 N· m (22 ±3 in-lb)
Hazard warning light switch mounting screw	1.5 ±0.5 N· m (14 ±4 in-lb)
Headlight mounting bolt	4.9 ±0.7 N· m (44 ±6 in-lb)
	2.5 ±0.3 N· m (22 ±3 in-lb)
High-mounted stoplight mounting bolt	2.5 ±0.3 N· m (22 ±3 in-lb)
Horn mounting bolt	21 ±4 N· m (16 ±2 ft-lb)
Meter bezel mounting screw	1.5 ±0.5 N· m (14 ±4 in-lb)
Radio bracket mounting screw	1.5 ±0.4 N· m (14 ±4 in-lb)
Rear combination light mounting screw	4.9 ±0.7 N· m (44 ±6 in-lb)
Speaker mounting screw	1.5 ±0.5 N· m (14 ±4 in-lb)

SERVICE SPECIFICATIONS

M1543000300658

<COMBINATION METER>

ITEM			STANDARD VALUE
Speedometer indication allowance range km/h (mph)		32 (20)	31 –35 (19 –22)
		64 (40)	61 –71 (38 –44)
		97 (60)	92 –106 (57 –66)
		129 (80)	122 –142 (76 –88)
		161 (100)	151 –177 (94 –110)
Tachometer indication allowance range r/min <A/T>		700	±100
		3,000	±150
		5,000	±250
		6,250	±150
Tachometer indication allowance range r/min <M/T>		700	±100
		3,000	±150
		5,000	±250
		6,000	±300
FWD	Fuel level sensor resistance Ω	Float point 'F'	2.2 –3.8
		Float point 'E'	107.5 –112.5
	Fuel level sensor float height mm (in)	A (Float point 'F')	35.4 (1.39)
		B (Float point 'E')	186.7 (7.35)

ITEM			STANDARD VALUE
AWD	Fuel level sensor resistance Ω	Float point 'F'	1.0 –2.0
		Float point 'E'	53.5 –56.5
	Fuel level sensor float height mm (in) <Fuel pump module and fuel level sensor>	A (Float point 'F')	36.7 (1.44)
		B (Float point 'E')	150.3 (5.91)
	Fuel level sensor float height mm (in) <Fuel level sensor>	A (Float point 'F')	20.8 (0.82)
		B (Float point 'E')	193.8 (7.63)
Engine coolant temperature gauge unit resistance [at 70° C (150° F)]Ω			104 + 13.5

<HEADLIGHT>

ITEM	STANDARD VALUE	LIMIT
Headlight aiming (vertical direction)	0.57° below horizontal (H)	0.17° or more
Headlight intensity cd (at high-beam)	-	40,000 or more {when a screen is set 18.3m (60 feet) ahead of the vehicles}

<FOG LIGHT>

ITEM	STANDARD VALUE	LIMIT
Fog light aiming (vertical direction)	Within 45 mm (0.86°) to 75 mm (1.44°) below the vertical centre line ahead of fog lamp.	–

SEALANTS AND ADHESIVES

M1543000500157

<COMBINATION METER>

ITEM	SPECIFIED SEALANT	REMARK
Engine coolant temperature gauge unit threaded portion	3M™ AAD part No. 8731, Locktite®242 Blue Service Tool Removable or equivalent	Semi-drying sealant